# PRODUCT CATALOGUE 2026



RXP

by aliaxis

# EXPERT WATER SOLUTIONS

We deliver smart rural water management solutions. With quality products, backed by an expert team, we can solve any water challenge on a farm or lifestyle block.



# ABOUT US

## RXP

For over 50 years, RXP has provided rural water expertise for New Zealand and global rural markets. RXP manufacture and distribute a wide range of products including PVC-U and polyethylene pipe, fittings, rotational moulded tanks and troughs, and irrigation and effluent dispersion products. Our services extend to the design of irrigation and stockwater systems and custom tanks. With over 100 staff nationwide, manufacturing and distribution sites in both the North and South Islands, we can help with all your rural water requirements.

## Aliaxis Group

RXP is part of the Aliaxis Group based in Belgium, with companies in over 40 countries worldwide. Aliaxis is a global leader in the manufacturing and distribution of advanced piping systems. By sharing our knowledge across the group we are able to provide sustainable innovative solutions for water and energy reduction. Best summed up as "Growth with Purpose."

## Health and Safety

Our goal is to provide an incident-free workplace and we take this seriously. We expect all our people, including contractors, visitors and those sharing roads with our vehicles, to return home safely to their families.

## Environment

We are focussed on reducing waste, water and energy use, and increasing our efforts to develop innovative products and processes. Sustainability is core to who we are and what we do. All our PVC-U and PE products are 100% recyclable. We are an accredited ISO14001 company and actively look at ways to reduce, reuse and recycle both raw material and product in our manufacturing process. We are involved in a $12.5 million project to recycle plastic waste and have over 30 collection sites nationwide.

## Quality

As an accredited ISO9001 company you can be assured all RXP products are manufactured to the highest quality and made for New Zealand conditions. RXP are the only manufacturing company in New Zealand providing products for the storage, transportation, and application of water. Our technical team develop practical solutions based on our working knowledge of how each part works together and what our customers' needs are.



# CONTENTS


| | |
|---|---|
| About Us | 1 |
| Freight, Delivery & Order Policy | 4 |

## PIPE

| | |
|---|---|
| **Polythene Pipe** | **6** |
| PE Technical Data | 6 |
| Lateral Polythene Pipe | 8 |
| Pot Dripper and Sprinkler Tube | 8 |
| Low Density Polythene Pipe | 9 |
| K.Pipe Polythene Pipe | 10 |
| Effluent Pipe | 11 |
| MDID Black Polythene Pipe | 11 |
| Medium Density Oasis™ Polythene Pipe | 12 |
| Pipe Tools and Accessories | 14 |
| **Drainflo®** | **15** |
| Drainflo® & Drainflo® HD | 16 |
| Drainflo® Smooth & Drainflo® Smooth HD | 17 |
| Drainflo® Fittings | 17 |
| **PVC-U Pressure Pipe** | **18** |
| PVC-U Technical Data | 18 |
| 800 Series PVC-U Pressure Pipe | 18 |
| **Stormwater and Culvert** | **21** |
| 550 Series PVC-U Culvert Pipe | 21 |
| **Accessories** | **22** |
| PVC Primer, Solvent, Lubricant | 22 |

## FITTINGS, VALVES & CAMLOCKS

| | |
|---|---|
| **Compression Fittings** | **23** |
| Compression Tapping Saddles | 26 |
| **BSP Threaded Fittings** | **27** |
| Polyprop Risers | 35 |
| **Metric Compression Fittings** | **38** |
| Metric Tapping Saddles | 44 |
| **Low Density Fittings** | **45** |
| **Trough & Tank Valves** | **50** |
| Acetal Float Valves | 50 |
| Brass Trough Valves | 51 |
| Spare Parts | 52 |
| Ball Floats and Nipples | 53 |
| Technical Data | 54 |
| **Irrigation Fittings and Sprinklers** | **55** |
| Sprinklers | 59 |
| Filtration | 59 |
| **Valves and Gauges** | **61** |
| Pressure Valves | 61 |
| Plastic Valves | 62 |
| Brass and Stainless Steel Gate Valves & Taps | 63 |
| Metal Ball Valves and Pressure Gauges | 64 |
| Brass and Stainless Steel Valves | 65 |
| Bibcocks and Mini Ball Valves | 66 |
| **Camlocks, Hose Clips and Clamps** | **67** |
| Agricultural (AG) Camlocks | 67 |
| General Purpose (GP) Camlocks | 68 |
| Polyprop (PP) Camlocks | 70 |
| Stainless Steel W3 Band Hose Clips | 72 |
| S/S W2 Band Heavy Duty Hose Clamps | 73 |

## TANKS AND TROUGHS


| | |
|---|---|
| **Tanks and Troughs** | **74** |
| MAX™ Tanks - 10,000-30,000 Litres | 75 |
| Water Tanks - 500-7,500 Litres | 76 |
| Colostrum, Foamed and Molasses Tanks | 77 |
| Metro Tanks | 77 |
| Tank Accessories - Molasses Kit & Tank Lids | 78 |
| Tank Fittings - Water Inlet System | 78 |
| Tank Fittings - Water Outlet System | 79 |
| Tank Fittings - Tank Overflow Kit | 80 |
| Tank Fittings - Tank Connection Kit | 80 |
| Tank Fittings - Firefighting | 80 |
| Tank Fittings - Tank Vents & Filter Baskets | 81 |
| Tank Fittings - Water Level Indicator | 81 |
| Super Troughs | 82 |
| Standard Troughs | 82 |
| K-Troughs | 83 |
| Nura / Header Tanks | 83 |


## SEPTIC TANKS


| | |
|---|---|
| **Septic Tank Range** | **84** |
| Environmental Septic Tank Range | 84 |
| Environmental Pump Chambers | 85 |
| Pump Chambers with Alarm & Pump | 86 |
| AirTech® Wastewater Treatment System | 87 |


## IRRIGATION


| | |
|---|---|
| **K-Line® Systems** | **88** |
| K-Line® Packs | 89 |
| Standard Pod Options | 90 |
| Mid Pod Options | 92 |
| Max Pod Options | 94 |
| Max70 Irrigation for 2ha | 95 |
| Spare Pods | 96 |
| K-Line® Tapping Saddle and Adaptor Packs | 96 |
| K-Line® Fittings | 98 |
| Tapping Saddles and U-Bolts | 99 |
| Adaptors and Stock Guards | 100 |
| Tow and Hook Caps | 101 |
| Naan Sprinklers | 101 |
| Nelson Sprinklers and Regulators | 102 |
| Senninger Sprinklers | 103 |
| Miscellaneous Tools and Parts | 104 |
| Weeping Walls and Pond Filter | 104 |
| K-Line® Connection Information | 105 |
| **G-Set® - Solid Set Irrigation** | **107** |
| Water-Insight Controllers | 111 |
| Sprinklers - Technical Information | 112–116 |


## INDUSTRIAL


| | |
|---|---|
| **Industrial Range** | **117** |
| Industrial Bins | 117 |
| Fishing/Pumping and Safety | 118 |
| Barrels and Casks | 118 |
| Tanks and Bins | 119 |
| Segregation Bins | 119 |
| Tubs | 120 |
| Chamber Pits | 120 |
| Chemical Tanks | 121 |
| Wine Tanks | 121 |

| | |
|---|---|
| Terms and Conditions of Supply | 122 |

# RXP Freight, Delivery and Order Policy

## Small Order/ Freight Surcharges

**Orders < $100 (for *fittings only* orders):**

- A "Surcharge" will be incurred on all fittings only Customer Purchase Orders (CPO) with an invoice value of $100 or less (excluding GST).
- The "Surcharge" of $10.00 (plus GST) will be invoiced at the time the first *fittings items* on the CPO are supplied.
- The CPO is defined as all product ordered on a single CPO number on a single day.
- Fittings only orders >$100 will not attract a surcharge.
- An additional charge of $10 will be applied to all Urgent, Rural delivery or Saturday delivery Orders. (Delivery service not guaranteed)

**Orders < $500 (for *non-fittings* orders and *combined non-fittings/fittings* orders)**

- A "small order surcharge" will be incurred on all *non-fittings* and *combined non-fittings/fittings* Customer Purchase Orders (CPO) with an invoice value of $500 or less (excluding GST).
- A "small order surcharge" of $30.00 (plus GST) will be invoiced at the time the first *non-fittings items* on the CPO are supplied.
- The CPO is defined as all product ordered on a single CPO number on a single day.
- If the CPO only includes fittings items then the "small order surcharge" does not apply.

## On-Site Freight Delivery Charges

All on-site delivery charges will be applied if an individual delivery's order value is less than $4,500 (excluding GST). The nominated site for delivery of items must have suitable safe hard roading to allow our nominated carrier to effect delivery. Should safe delivery not be possible through failure of the Buyer to comply with this provision any additional expenses incurred by the Company (RXP) in effecting delivery shall be paid by the Buyer. For the avoidance of doubt "On-site" means any other delivery address other than your store's physical address.

The associated charge for on-site delivery is $200 + GST per delivery.

This charge is applicable to all on-site deliveries of pipe lengths /crates, tanks <15000 litre, and/or coils where the order value of that delivery is less than $4,500 (excluding GST), including drawdowns from contract quotations.

NB: Max Tanks (15,000 to 30,000L) are excluded from this charge and are freight free to site.

## On-Site and At-Store Freight Unloading Charges

A charge to unload product for deliveries will be applied if no other safe means of unloading is available or provided by the consignee.

NB: If consignee is unable to off load then a request for Hiab should be made at time of order placement.

**On-Site and At-Store Unloading charge (Hiab)**

| | | |
|---|---|---|
| Truck Unloading: | (Municipal areas) | $250.00 +GST |
| | (Rural) – Only available on orders > $10k | $250.00 +GST |
| | (Over Dimensional) | POA |
| | Multiple drops (additional per drop) | $250.00 +GST |

This freight unloading charge is applicable to all on-site or at-store deliveries and is additional to any applicable on-site freight delivery charge, including any drawdowns from contract quotations.

## Restocking of Returned Goods

Goods returned are required to be in 'as new' condition and fit for re-sell. Product must also be <3months old from time of purchase. The return of goods to RXP is ultimately at the sole discretion of RXP and requires approval from your sales representative. Our Returned Materials Authorisation (RMA) process is the only acceptable method for authorised returns and will assist with the timely processing of any due credits.

All approved product returns will attract a restocking fee. The restocking fee will be the greater of 15% of the sales invoice value of the goods or a minimum charge of $20.00 (plus GST). Any cost of freight to return goods is in addition to the restocking fee.

## Damaged / Missing Goods

It is important that goods are inspected by the Buyer for damage upon acceptance of delivery. In the case of on farm or site delivery, the Buyer will arrange inspection at time of delivery. We will replace any damaged goods or missing items if you are able to supply proof of delivery (POD) signed with a notation that the goods were damaged at time of delivery or box/ctn numbers were not correct. If the discrepancy is not noted on the POD at the time of delivery, then RXP will not be liable to replace any damaged/ missing goods at no charge.

NB. RXP must be advised within 7 days of any freight issues.

## Over Dimensional (OD) Deliveries

Off loading of an over dimensional item will need to be quoted, as it will be dependent on item and location. Delivery times for Hiab and over dimensional deliveries are dependent on truck availability and may take up to 3 additional days for delivery. Not all sites and locations will have this service but can be confirmed at time of order.

**Definition over dimensional**

- Polyethylene coils with a pipe diameter of 90mm or greater
- Polyethylene straight lengths greater than 6m in length
- Non-Pipe items greater than 4 cubic meter

## Customer Collections

- Standard collection times are Monday to Friday between 9am and 3pm.
- A minimum of 1 hour is required between receiving the Order Confirmation from RXP and coming to collect at RXP sites. NB. Person collecting must bring a copy of the Sales Order Number (found on order confirmation) when coming to collect.
- RXP is committed to the Health and Safety of our staff and customers and reserves the right to refuse loading of any vehicle that we deem a Health and Safety hazard. Any costs incurred due to the non-loading of items is borne by the Buyer. A full copy of H&S protocols can be obtained from Customer Services.

## Important Note

**Special Pricing and Quotes:** quotes@rxplastics.co.nz
**Orders and General Enquiries:** customerservice@rxplastics.co.nz 0800 288 558

All prices are subject to change without notice. Pricing is per each item and excludes GST.

Whilst we have done all we can to ensure that the prices are correct at the time of print, we reserve the right to change our product prices at anytime without further notice.

Product images are for illustrative purposes only and may differ from the actual product.

# POLYTHENE PIPE

## Technical Data

| Conversions | kPa | psi | $mH_2O$ |
|---|---|---|---|
| 1 bar | 100 | 14.5 | 10.20 |
| 1 psi | 6.9 | - | - |

## Lateral Dimensions and Pressure Ratings

| Nominal Bore | Average Outside Diameter (mm) | Average Wall Thickness (mm) | Max Working Pressure | | Average Internal Diameter (mm) |
|---|---|---|---|---|---|
| | | | psi | kPa | |
| 13mm | 15.30 | 1.15 | 72 | 500 | 13.00 |
| 16mm | 18.60 | 1.30 | 72 | 500 | 16.00 |
| 19mm | 22.00 | 1.50 | 72 | 500 | 19.00 |
| 25mm | 28.70 | 1.85 | 72 | 500 | 25.00 |

## Low Density Dimensions and Pressure Ratings

| Nominal Bore | Average Outside Diameter (mm) | Average Wall Thickness (mm) | Max Working Pressure | | Average Internal Diameter (mm) |
|---|---|---|---|---|---|
| | | | psi | kPa | |
| 15mm | 17.10 | 2.45 | 140 | 970 | 12.20 |
| 20mm | 25.15 | 3.30 | 130 | 900 | 18.55 |
| 25mm | 31.50 | 3.30 | 115 | 800 | 24.90 |
| 32mm | 37.75 | 3.30 | 94 | 650 | 31.20 |
| 40mm | 44.15 | 3.30 | 87 | 600 | 37.55 |
| 45mm | 50.25 | 3.30 | 80 | 550 | 43.65 |
| 50mm | 56.85 | 3.30 | 72 | 500 | 50.25 |

## K.Pipe Dimensions and Pressure Ratings

| Nominal Bore | Average Outside Diameter (mm) | Average Wall Thickness (mm) | Max Working Pressure | | Average Internal Diameter (mm) |
|---|---|---|---|---|---|
| | | | psi | kPa | |
| 32mm | 37.75 | 3.30 | 94 | 650 | 31.20 |
| 40mm | 44.15 | 3.30 | 87 | 600 | 37.55 |
| 45mm | 50.25 | 3.30 | 80 | 550 | 43.55 |
| 63mm | 63.30 | 4.00 | 72 | 500 | 55.20 |

## MDID Dimensions and Pressure Ratings

### PN12

| Nominal Bore | Average Outside Diameter (mm) | Average Wall Thickness (mm) | Max Working Pressure PN (Bar) | Average Internal Diameter (mm) |
|---|---|---|---|---|
| 15mm | 17.50 | 1.75 | 12 Bar | 13.80 |
| 20mm | 25.15 | 2.45 | 12 Bar | 20.25 |
| 25mm | 31.50 | 3.10 | 12 Bar | 25.30 |
| 32mm | 37.75 | 3.65 | 12 Bar | 30.45 |
| 40mm | 44.15 | 4.25 | 12 Bar | 35.65 |
| 50mm | 60.40 | 5.75 | 12 Bar | 48.90 |

*Average = mean distribution of manufacturing tolerances and is provided as a guide only.

# POLYTHENE PIPE

## MDEF Effluent Pipe Dimensions and Pressure Ratings

| Code Nominal Bore | Average Outside Diameter (mm | Average Wall Thickness (mm) | Max Working Pressure | | Average Internal Diameter (mm) |
|---|---|---|---|---|---|
| | | | psi | kPa | |
| MDEF 57mm | 57.30 | 3.50 | 116 | 800 | 50.30 |
| MDEF 63mm | 63.30 | 4.05 | 116 | 800 | 55.20 |
| MDEF 75mm | 75.35 | 4.80 | 116 | 800 | 65.75 |
| MDEF 90mm | 90.45 | 5.75 | 116 | 800 | 78.95 |
| PE100 75mm | 75.35 | 4.80 | 145 | 1000 | 65.75 |
| PE100 90mm | 90.45 | 5.75 | 145 | 1000 | 78.95 |
| PE100 110mm | 110.50 | 7.00 | 145 | 1000 | 96.50 |

## Oasis Pipe Systems

MDPE Oasis Range - Code 300.xxx.ppp.len e.g. 300.32.9.100 is 300 series, 32mm, PN9 and 100m.

## Standard Dimension Ratios (SDRs) for SERIES 1 Pipes

| Compound | PN 6.3 | PN 8 | PN 9 | PN 10 | PN 12.5 | PN 16 | PN 20 |
|---|---|---|---|---|---|---|---|
| PE80 | **21** # | 17 | | 13.6 | 11 | 9 | 7.4 |
| PE100 | | 21 | **19** | 17 | **13.6** | **11** | 9 |

#Highlighted cells above = Products produced as standard in Oasis Pipe systems.

## Medium Density Dimensions and Pressure Ratings - PE80/100

| Size External Dimensions | Average OD (mm) | SDR 21 Average Wall Thickness (mm) | SDR 21 ID (mm) | SDR 19 Average Wall Thickness (mm) | SDR 19 ID (mm) | SDR 17 Average Wall Thickness (mm) | SDR 17 ID (mm) |
|---|---|---|---|---|---|---|---|
| 20mm | 20.15 | | | | | | |
| 25mm | 25.15 | | | 1.75 | 21.65 | 1.75 | 21.65 |
| 32mm | 32.15 | 1.75 # | 28.65 | 1.90 | 28.35 | 2.05 | 28.05 |
| 40mm | 40.20 | 2.05 | 36.10 | 2.32 | 35.50 | 2.50 | 35.00 |
| 50mm | 50.25 | 2.60 | 45.05 | 2.90 | 44.45 | 3.20 | 43.85 |
| 63mm | 63.30 | 3.25 | 56.90 | 3.82 | 56.05 | 4.05 | 55.20 |
| 75mm | 75.35 | 3.65 | 67.65 | 4.32 | 66.70 | 4.80 | 65.75 |
| 90mm | 90.45 | 4.37 | 81.25 | 5.17 | 80.10 | 5.75 | 78.95 |
| 110mm | 110.50 | | | 7.00 | 97.85 | 7.00 | 96.50 |

| Size External Dimensions | Average OD (mm) | SDR 13.6 Average Wall Thickness (mm) | SDR 13.6 ID (mm) | SDR 11 Average Wall Thickness (mm) | SDR 11 ID (mm) | SDR 9 Average Wall Thickness (mm) | SDR 9 ID (mm) | SDR 7.4 Average Wall Thickness (mm) | SDR 7.4 ID (mm) |
|---|---|---|---|---|---|---|---|---|---|
| 20mm | 20.10 | 1.75 | 16.65 | 2.05 | 16.05 | 2.50 | 15.15 | 3.00 | 14.15 |
| 25mm | 25.20 | 2.05 | 21.05 | 2.50 | 20.15 | 3.00 | 19.15 | 3.75 | 17.65 |
| 32mm | 32.20 | 2.60 | 26.95 | 3.10 | 25.95 | 3.85 | 24.45 | 4.70 | 22.75 |
| 40mm | 40.20 | 3.20 | 33.80 | 3.95 | 32.30 | 4.80 | 30.60 | 5.85 | 28.50 |
| 50mm | 50.20 | 3.95 | 42.35 | 4.90 | 40.45 | 5.95 | 38.35 | 7.30 | 35.65 |
| 63mm | 63.30 | 5.00 | 53.30 | 6.15 | 51.00 | 7.55 | 48.20 | 9.10 | 45.10 |
| 75mm | 75.30 | 5.60 | 63.65 | 7.20 | 60.95 | 8.90 | 57.55 | 10.90 | 53.55 |
| 90mm | 90.14 | 7.00 | 76.45 | 8.70 | 73.05 | 10.70 | 69.05 | 13.00 | 64.46 |
| 110mm | 110.50 | 8.60 | 93.30 | 10.50 | 89.40 | 13.00 | 84.50 | 15.95 | 78.60 |

#Highlighted cells above = Products produced as standard in Oasis Pipe systems.
*Average = mean distribution of manufacturing tolerances and is provided as a guide only.

# POLYTHENE PIPE

## Lateral Polythene Pipe

| RXP Code | Average Nominal Bore (ID) (mm) | Average Outside Diameter (mm) | Coil Sizes (metres) | Pressure Rating kPa / psi |
|---|---|---|---|---|
| LAT13.050 | 13mm | 15.3mm | 50m | 500/72 |
| **LAT13.100** | **13mm** | **15.3mm** | **100m** | **500/72** |
| LAT13.200 | 13mm | 15.3mm | 200m | 500/72 |
| LAT16.050 | 16mm | 18.6mm | 50m | 500/72 |
| **LAT16.100** | **16mm** | **18.6mm** | **100m** | **500/72** |
| LAT16.200 | 16mm | 18.6mm | 200m | 500/72 |
| LAT19.050 | 19mm | 22mm | 50m | 500/72 |
| **LAT19.100** | **19mm** | **22mm** | **100m** | **500/72** |
| LAT19.200 | 19mm | 22mm | 200m | 500/72 |
| LAT19.300 | 19mm | 22mm | 300m | 500/72 |
| LAT25.050 | 25mm | 28.7mm | 50m | 500/72 |
| **LAT25.100** | **25mm** | **28.7mm** | **100m** | **500/72** |
| LAT25.200 | 25mm | 28.7mm | 200m | 500/72 |
| RXGT25.050 | 24.9mm | 28.7mm | 50m | 500/72 |
| RXGT25.060 | 24.9mm | 28.7mm | 60m | 500/72 |
| **RXGT25.070** | **24.9mm** | **28.7mm** | **70m** | **500/72** |
| RXGT25.100 | 24.9mm | 28.7mm | 100m | 500/72 |



Special prices may be given on larger quantities over 10,000 metres of individual pipe size groups. Pipe available in special lengths on request.

## Pot Dripper and Sprinkler Tube

| RXP Code | Description | (ID) (mm) | (OD) (mm) |
|---|---|---|---|
| POTD.3MM.050 | 3mm ID wall x 50 metres coil Pot dripper tube PVC | 3mm | 5mm |
| PT9/13.100 | 9mm ID wall x 100 metres coil Sprinkler Tube PE | 9mm | 13mm |
| PVC4/7.050 | PVC 4/7.050 metres - Sprinkler Tube PVC | 4mm | 7mm |
| PVC4/7.200B | PVC 4/7.200mm complete with connector barb | 4mm | 7mm |
| PVC4/7.600B | PVC 4/7.600mm complete with connector barb | 4mm | 7mm |
| PVC4/7.600NB | PVC 4/7.600mm without connector barb | 4mm | 7mm |
| PVC7/10.050 | PVC7/10.050 metres - Sprinkler Tube PVC | 7mm | 10mm |







# POLYTHENE PIPE

## Low Density Polythene Pipe

- Higher pressure rating than New Zealand standard.
- Tough and durable.
- Thick wall to avoid “kinking”.
- Numbered metre markings on pipe for easy installation.
- Fits RXP Compression fittings 32mm to 40mm (½” to 1½”).
- Fits RXP Low Density fittings 15mm to 50mm (½” to 2”).
- Easy to work with and user friendly.



| RXP Code | Nominal Bore | Pressure Rating (Maximum Working Pressure) |
|---|---|---|
| LD15.025 | 15mm | 970 kPa / 140psi |
| LD15.050 | 15mm | 970 kPa / 140psi |
| LD15.100 | 15mm | 970 kPa / 140psi |
| LD15.200 | 15mm | 970 kPa / 140psi |
| LD20.025 | 20mm | 900 kPa / 130psi |
| LD20.050 | 20mm | 900 kPa / 130psi |
| LD20.100 | 20mm | 900 kPa / 130psi |
| LD20.200 | 20mm | 900 kPa / 130psi |
| LD25.025 | 25mm | 800 kPa / 115psi |
| LD25.050 | 25mm | 800 kPa / 115psi |
| LD25.100 | 25mm | 800 kPa / 115psi |
| LD25.200 | 25mm | 800 kPa / 115psi |
| LD32.025 | 32mm | 650 kPa / 94psi |
| LD32.050 | 32mm | 650 kPa / 94psi |
| LD32.100 | 32mm | 650 kPa / 94psi |
| LD32.200 | 32mm | 650 kPa / 94psi |
| LD40.050 | 40mm | 600 kPa / 87psi |
| LD40.100 | 40mm | 600 kPa / 87psi |
| LD40.200 | 40mm | 600 kPa / 87psi |
| LD50.050 | 50mm | 500 kPa / 72psi |
| LD50.100 | 50mm | 500 kPa / 72psi |
| LD50.200 | 50mm | 500 kPa / 72psi |
| | 6 metre lengths (10 per bundle) | |
| LD20.006.10 | 20mm | 900 kPa / 130psi |

# POLYTHENE PIPE

## K.Pipe Low Density Polythene Pipe

- Designed specifically for K-Line® Irrigation.
- Tough and durable for vigorous shifting of K-Line®.
- Not about pressure rating but about performance.
- 1 metre spacings on pipe for easy installation.
- Fits specialist RXP K-Pipe fittings 32mm to 50mm (1¼" to 2").
- Fits RXP Low Density fittings 32mm to 50mm (1¼" to 2").
- AG camlocks used for 63mm K.Pipe connections.
- The three stripes helps to ensure pipe is not twisted before installation.
- Easy to work with and user friendly.

| RXP Code | Nominal Bore | Pressure Rating (Maximum Working Pressure) |
|---|---|---|
| K.PIPE32.100 | 32mm | 650 kPa / 94psi |
| K.PIPE32.200 | 32mm | 650 kPa / 94psi |
| K.PIPE40.100 | 40mm | 600 kPa / 87psi |
| K.PIPE40.200 | 40mm | 600 kPa / 87psi |
| K.PIPE45.100 | 45mm | 550 kPa / 80psi |
| K.PIPE63.100 | 63mm | 500 kPa / 72psi |



| | | |
|---|---|---|
| K.PIPE63.040C | 63mm | 500 kPa / 72psi |
| K.PIPE63.050C | 63mm | 500 kPa / 72psi |
| K.PIPE63.100C | 63mm | 500 kPa / 72psi |



Camlocks are AGE5163 and AGC5163

# POLYTHENE PIPE

## Effluent Pipe

- Designed specifically for effluent use.
- Suitable for AG camlocks used for 50, 63, 75 & 90mm connections.
- Easy to work with and user friendly.
- SDR 17 PE80

| RXP Code | Outside Diameter (mm) Nominal | Pressure Rating (Maximum Working Pressure) |
|---|---|---|
| MDEF57.50 | 57mm | 800 kPa / 116psi |
| MDEF57.100 | 57mm | 800 kPa / 116psi |
| MDEF63.50 | 63mm | 800 kPa / 116psi |
| MDEF63.100 | 63mm | 800 kPa / 116psi |
| MDEF75.50 | 75mm | 800 kPa / 116psi |
| MDEF75.100 | 75mm | 800 kPa / 116psi |
| MDEF90.50 | 90mm | 800 kPa / 116psi |
| MDEF90.100 | 90mm | 800 kPa / 116psi |



## MDID Black Density Polythene Pipe

- Superior flow over low density.
- 15-50mm MDID - design safety factor to the same as AS/NZS 4130 (metric).
- Equivalent to Imperial High Density Pipe.
- Consistent pressure ratings over sizes.
- MDID is suitable for use with bloat remedies.
- Pipe manufactured to RXP company standards.
- Scratch resistant.
- Suitable for RXP compression fittings and tapping saddles.
- Pressure ratings stipulated are recommended maximum working pressure at 20°C.
- Measured as nominal bore (internal diameter measurements).
- Special prices may be given on larger quantities over 2000 metres of individual pipe size groups.

| RXP Code | Size Nominal Bore | Pressure Rating (Maximum Working Pressure) |
|---|---|---|
| MDID BLACK CLASS D - 12 Bar - 174psi (SDR11) | | |
| MDID15*12B | 15mm | 12 Bar |
| MDID20*12B | 20mm | 12 Bar |
| MDID25*12B | 25mm | 12 Bar |
| MDID32*12B | 32mm | 12 Bar |
| MDID40*12B | 40mm | 12 Bar |
| MDID50*12B | 50mm | 12 Bar |

Some coils available in 50m lengths.



# POLYTHENE PIPE

## Medium Density Oasis™ Polythene Pipe

- Manufactured dimensionally to AS/NZS 4130.
- Made from tough medium density polyethylene.
- Suitable for use with bloat remedies.
- Pressure ratings stipulated are recommended maximum working pressure at 20°C.
- Maintains a consistent pressure rating across a range of pipe diameters.
- Lightweight, flexible and strong, withstanding tough rural pipe laying.
- Clear identification on all coils.
- UV stable.
- Suitable for a wide range of fittings - metric fittings, electrofusion and camlocks.
- Special pricing may be given on larger quantities over 2000 metres of individual pipe size groups.

| RXP Code | Size External Dimension / Length | Pressure Rating (Maximum Working Pressure) |
|---|---|---|
| Oasis PE80 - 6.3Bar - 91psi (SDR21) | | |
| 300.32.6.100 | 32mm x 100m | 6.3 Bar |
| 300.32.6.200 | 32mm x 200m | 6.3 Bar |
| 300.40.6.50 | 40mm x 50m | 6.3 Bar |
| 300.40.6.100 | 40mm x 100m | 6.3 Bar |
| 300.40.6.200 | 40mm x 200m | 6.3 Bar |
| 300.50.6.50 | 50mm x 50m | 6.3 Bar |
| 300.50.6.100 | 50mm x 100m | 6.3 Bar |
| 300.50.6.200 | 50mm x 200m | 6.3 Bar |
| 300.63.6.50 | 63mm x 50m | 6.3 Bar |
| 300.63.6.100 | 63mm x 100m | 6.3 Bar |
| 300.63.6.200 | 63mm x 200m | 6.3 Bar |
| 300.75.6.100 | 75mm x 100m | 6.3 Bar |



| Oasis PE100 -9Bar - 130psi (SDR19) | | |
|---|---|---|
| 300.25.9.50 | 25mm x 50m | 9 Bar |
| 300.25.9.100 | 25mm x 100m | 9 Bar |
| 300.25.9.200 | 25mm x 200m | 9 Bar |
| 300.32.9.50 | 32mm x 50m | 9 Bar |
| 300.32.9.100 | 32mm x 100m | 9 Bar |
| 300.32.9.200 | 32mm x 200m | 9 Bar |
| 300.40.9.50 | 40mm x 50m | 9 Bar |
| 300.40.9.100 | 40mm x 100m | 9 Bar |
| 300.40.9.200 | 40mm x 200m | 9 Bar |
| 300.50.9.50 | 50mm x 50m | 9 Bar |
| 300.50.9.100 | 50mm x 100m | 9 Bar |
| 300.50.9.200 | 50mm x 200m | 9 Bar |
| 300.63.9.50 | 63mm x 50m | 9 Bar |
| 300.63.9.100 | 63mm x 100m | 9 Bar |
| 300.63.9.200 | 63mm x 200m | 9 Bar |
| 300.75.9.100 | 75mm x 100m | 9 Bar |
| 300.90.9.50 | 90mm x 50m | 9 Bar |
| 300.90.9.100 | 90mm x 100m | 9 Bar |
| 300.110.9.100 | 110mm x 100m | 9 Bar |



# POLYTHENE PIPE

## Medium Density Oasis™ Polythene Pipe

- Manufactured to AS/NZS 4130. Black.
- Pressure ratings stipulated are recommended maximum working pressure at 20°C.
- PE100 pipe is suitable for use with bloat remedies.
- Suitable for a wide range of fittings - Metric fittings and Electrofusion.
- Special pricing may be given on larger quantities over 2000 metres of individual pipe size groups.

| RXP Code | Size External Dimension / Length | Pressure Rating (Maximum Working Pressure) |
|---|---|---|
| Oasis PE100 - 12Bar - 174psi (SDR13.6) | | |
| 300.25.12.50 | 25mm x 50m | 12.5 Bar |
| 300.25.12.100 | 25mm x 100m | 12.5 Bar |
| 300.25.12.200 | 25mm x 200m | 12.5 Bar |
| 300.32.12.50 | 32mm x 50m | 12.5 Bar |
| 300.32.12.100 | 32mm x 100m | 12.5 Bar |
| 300.32.12.200 | 32mm x 200m | 12.5 Bar |
| 300.40.12.50 | 40mm x 50m | 12.5 Bar |
| 300.40.12.100 | 40mm x 100m | 12.5 Bar |
| 300.40.12.200 | 40mm x 200m | 12.5 Bar |
| 300.50.12.50 | 50mm x 50m | 12.5 Bar |
| 300.50.12.100 | 50mm x 100m | 12.5 Bar |
| 300.50.12.200 | 50mm x 200m | 12.5 Bar |
| 300.63.12.50 | 63mm x 50m | 12.5 Bar |
| 300.63.12.100 | 63mm x 100m | 12.5 Bar |
| 300.63.12.200 | 63mm x 200m | 12.5 Bar |
| 300.75.12.100 | 75mm x 100m | 12.5 Bar |
| 300.90.12.100 | 90mm x 100m | 12.5 Bar |
| 300.110.12.100 | 110mm x 100m | 12.5 Bar |



32mm - 63mm coils stocked in 50m, 100m and 200m lengths.
75mm-110mm coils stocked in 50m and 100m lengths only.

# POLYTHENE PIPE

## Medium Density Oasis™ Polythene Pipe

- Manufactured to AS/NZS 4130. Black.
- Pressure ratings stipulated are recommended maximum working pressure at 20°C.
- PE100 Pipe is suitable for use with bloat remedies.
- Suitable for a wide range of fittings - Metric fittings and Electrofusion.
- Special pricing may be given on larger quantities over 2000 metres of individual pipe size groups.

| RXP Code | Size External Dimension / Length | Pressure Rating (Maximum Working Pressure) |
|---|---|---|
| Oasis PE100 - 16Bar - 238psi (SDR11) | | |
| 300.25.16.100 | 25mm x 100m | 16 Bar |
| 300.32.16.100 | 32mm x 100m | 16 Bar |
| 300.40.16.100 | 40mm x 100m | 16 Bar |
| 300.50.16.100 | 50mm x 100m | 16 Bar |
| 300.63.16.100 | 63mm x 100m | 16 Bar |
| 300.75.16.100 | 75mm x 100m | 16 Bar |
| 300.90.16.100 | 90mm x 100m | 16 Bar |
| 300.110.16.100 | 110mm x 100m | 16 Bar |



## Pipe Tools and Accessories

| RXP Code | Description |
|---|---|
| | Pipe Tools |
| RXPC | Pipe Cutters - cuts pipe up to 50mm OD |
| PCT | Pipe Chamfering Tool - to fit pipe up to 63mm OD |
| PHPS | Metric Fitting Spanner 50 to 110mm |



| | |
|---|---|
| | Ceelon Thread |
| CT | Ceelon Thread Seal Tape 12mm (Red Surround) |
| CT.18 | Ceelon Thread Seal Tape 18mm (Blue Surround) |
| CT.24 | Ceelon Thread Seal Tape 24mm (Green Surround) |

Produced from pure PTFE. Flexible, and easy to work with thread seal tape is used for providing a water tight seal on threaded joints. Will not dry out, harden or crack with age.

# Drainflo®

## LOOKING AFTER YOUR LAND



Drainflo Smooth

Drainflo Smooth HD



Drainflo

Drainflo HD

Unpunched and filtersock options available across the range.

## THE DRAINFLO® RANGE HAS ALL YOUR JOBS COVERED

High performing, flexible, crush resistant products that stand the test of time. Including Drainflo® Smooth with its refined double-walled smooth inner lining for outstanding water flow rates. Drainflo® Smooth is the high performing solution.

For improved soil health and surface quality, choose Drainflo® — 100% recyclable Polyethylene drainage.

rxp.co.nz

RANGE · DURABILITY · STRENGTH · FLOW · DRAINAGE · FILTRATION · NZ MADE · 100% RECYCLABLE

RXP by aliaxis

# DRAINFLO®

## Drainflo® Code Structure

Wall Type and Punched v Unpunched
400 - Single Wall Punched
420 - Smooth Bore Punched
500 - Single Wall Unpunched
520- Smooth Bore Unpunched

**400.110.100FS**

Outside Diameter
65, 110, 160

Length
15m, 30m, 45m,
50m, 100m, 150m

Special Variant
FS - Filtersock
HD - Heavy Duty SN10
U - Unpunched

## Drainflo®



| RXP Code | Description |
|---|---|
| 400.65.15 | Drainflo 65mm x 15m |
| 400.65.30 | Drainflo 65mm x 30m |
| 400.65.50 | Drainflo 65mm x 50m |
| 400.110.15 | Drainflo 110mm x 15m |
| 400.110.30 | Drainflo 110mm x 30m |
| 400.110.50 | Drainflo 110mm x 50m |
| 400.110.100 | Drainflo 110mm x 100m |
| 400.160.15 | Drainflo 160mm x 15m |
| 400.160.45 | Drainflo 160mm x 45m |
| | |
| 500.65.15U | Drainflo 65mm x 15m Unpunched |
| 500.65.30U | Drainflo 65mm x 15m Unpunched |
| 500.110.15U | Drainflo 110mm x 15m Unpunched |
| 500.110.30U | Drainflo 110mm x 30m Unpunched |
| 500.110.50U | Drainflo 110mm x 50m Unpunched |
| 500.110.100U | Drainflo 110mm x 100m Unpunched |
| 500.160.15U | Drainflo 160mm x 15m Unpunched |
| 500.160.45U | Drainflo 160mm x 45m Unpunched |
| | |
| 400.110.30FS | Drainflo 110mm x 30m with Filtersock |
| 400.110.100FS | Drainflo 110mm x 100m with Filtersock |
| 400.160.45FS | Drainflo 160mm x 45m with Filtersock |

## Drainflo® HD



| | |
|---|---|
| 400.110.100HD | Drainflo HD 110mm x 100m |
| 400.160.45HD | Drainflo HD 160mm x 45m |
| | |
| 400.110.100HDFS | Drainflo HD 110mm x 100m with Filtersock |
| 400.160.45HDFS | Drainflo HD 160mm x 45m with Filtersock |

**All Drainflo® coils come complete with coupler**

# DRAINFLO®

## Drainflo® Smooth

| RXP Code | Description |
|---|---|
| 420.110.30 | Drainflo Smooth 110mm x 30m |
| 420.110.50 | Drainflo Smooth 110mm x 50m |
| 420.110.100 | Drainflo Smooth 110mm x 100m |
| 420.160.45 | Drainflo Smooth 160mm x 45m |
| | |
| 520.110.30 | Drainflo Smooth 110mm x 30m Unpunched |
| 520.110.100 | Drainflo Smooth 110mm x 100m Unpunched |
| 520.160.45 | Drainflo Smooth 160mm x 45m Unpunched |
| | |
| 420.110.30FS | Drainflo Smooth 110mm x 30m with Filtersock |
| 420.110.100FS | Drainflo Smooth 110mm x 100m with Filtersock |
| 420.160.45FS | Drainflo Smooth 160mm x 45m with Filtersock |



## Drainflo® Smooth HD

| | |
|---|---|
| 420.110.100HD | Drainflo Smooth HD 110mm x 100m |
| 420.160.45HD | Drainflo Smooth HD 160mm x 45m |
| | |
| 520.110.100HD | Drainflo Smooth HD 110mm x 100m Unpunched |
| 520.160.45HD | Drainflo Smooth HD 160mm x 45m Unpunched |
| | |
| 420.110.100HDFS | Drainflo Smooth HD 110mm x 100m with Filtersock |
| 420.160.45HDFS | Drainflo Smooth HD 160mm x 45m with Filtersock |



## Drainflo® Fittings

| | |
|---|---|
| 510.65 | Straight Coupler 65mm - Black |
| 510.110 | Straight Coupler 110mm - Black |
| 510.160 | Straight Coupler 160mm - Black |
| | |
| 504.110.45 | Y Junction (45°) 110mm - Black |
| 504.160.45 | Y Junction (45°) 160mm - Black |
| | |
| 505.160.110.45 | 160mm x 110mm Reducing Y Junction {(160mm manway) (45°)} |







# PVC-U Pressure Pipe - POWER-LOCK™

## Technical Data

| Conversions | kPa | psi | $mH_2O$ |
|---|---|---|---|
| 1 bar | 100 | 14.5 | 10.20 |
| 1 psi | 6.9 | - | - |

## PVC-U 800 Pressure Pipe (Series 1) Dimensions and Pressure Ratings

| | OD (mm) | Internal | | | | |
|---|---|---|---|---|---|---|
| PN (BAR) | | 6 | 9 | 12 | 15 | 18 |
| PVCU15 | 21.30 | | | | 18.25 | 17.75 |
| PVCU20 | 26.70 | | | 23.65 | 22.95 | 22.35 |
| PVCU25 | 33.50 | | 30.45 | 29.75 | 28.95 | 28.05 |
| PVCU32 | 42.30 | | 38.45 | 37.45 | 36.35 | 35.35 |
| PVCU40 | 48.30 | 45.15 | 44.05 | 42.75 | 41.55 | 40.45 |
| PVCU50 | 60.40 | 56.75 | 55.15 | 53.65 | 52.15 | 50.45 |
| PVCU65 | 75.40 | 70.95 | 68.85 | 66.95 | 65.05 | 63.15 |
| PVCU80 | 88.70 | 83.70 | 81.30 | 79.00 | 76.70 | 74.60 |
| PVCU100 | 114.30 | 107.80 | 104.60 | 101.70 | 98.80 | 96.00 |
| PVCU125 | 140.20 | 132.20 | 128.40 | 124.90 | 121.30 | 117.70 |
| PVCU150 | 160.30 | 151.25 | 146.85 | 142.65 | 138.65 | 134.65 |
| PVCU175 | 200.30 | 190.05 | 185.15 | 180.55 | 175.95 | 171.45 |
| PVCU200 | 225.30 | 213.80 | 208.50 | 203.10 | 198.00 | 192.90 |
| PVCU225 | 250.40 | 237.65 | 231.65 | 225.75 | 219.95 | 214.35 |
| PVCU250 | 280.40 | 226.20 | 259.40 | 252.90 | 246.40 | 240.10 |
| PVCU300 | 315.40 | 299.45 | 291.95 | 284.45 | 277.25 | 270.15 |
| PVCU350 | 335.50 | 337.50 | 329.00 | 320.60 | 312.50 | 304.50 |
| PVCU375 | 400.50 | 380.30 | 370.70 | 361.20 | 352.00 | 343.00 |
| PVCU400 | 450.50 | 427.80 | 416.90 | 406.40 | 396.00 | 428.70 |
| PVCU450 | 500.50 | 475.30 | 463.30 | 451.40 | 440.00 | |

## 800 Series 1 PVC-U Pressure Pipe

- High quality pipe suitable for pressure pipeline systems for cold water services.
- Available in dimensions that are produced in accordance with AS/NZS 1477.
- Effective 6m laid lengths.
- Supplied as Ring Joint.
- “Solvent Joint” Pressure Pipe is subject to availability.
- Lead free product.

| RXP Code | Nominal Size (mm) | Outside Diameter (mm) | Pressure Rating @ 20˚C | Pack Quantity |
|---|---|---|---|---|
| PN6 (Class "B") | | | | |
| 800.80.PN6.6RJ | 80 | 88.7 | 6 Bar / 87 psi | 57 |
| 800.100.PN6.6RJ | 100 | 114.1 | 6 Bar / 87 psi | 38 |
| 800.125.PN6.6RJ | 125 | 140 | 6 Bar / 87 psi | 22 |
| 800.150.PN6.6RJ | 150 | 160 | 6 Bar / 87 psi | 28 |
| 800.175.PN6.6RJ | 175 | 200 | 6 Bar / 87 psi | 10 |
| 800.200.PN6.6RJ | 200 | 225 | 6 Bar / 87 psi | 8 |
| 800.225.PN6.6RJ | 225 | 250 | 6 Bar / 87 psi | 8 |
| 800.250.PN6.6RJ | 250 | 280 | 6 Bar / 87 psi | 6 |
| 800.300.PN6.6RJ | 300 | 315 | 6 Bar / 87 psi | 6 |
| 800.375.PN6.6RJ | 375 | 400 | 6 Bar / 87 psi | 6 |
| 800.450.PN6.6RJ | 450 | 500 | 6 Bar / 87 psi | 6 |



RING JOINT (RJ)

# PVC-U Pressure Pipe - POWER-LOCK™

| RXP Code | Nominal Size (mm) | Outside Diameter (mm) | Pressure Rating @ 20°C | Pack Quantity |
|---|---|---|---|---|
| PN9 (Class "C") | | | | |
| 800.50.PN9.6RJ | 50 | 60.2 | 9 Bar / 130 psi | 150 |
| 800.65.PN9.6RJ | 65 | 75.2 | 9 Bar / 130 psi | 96 |
| 800.80.PN9.6RJ | 80 | 88.7 | 9 Bar / 130 psi | 57 |
| 800.100.PN9.6RJ | 100 | 114.1 | 9 Bar / 130 psi | 38 |
| 800.125.PN9.6RJ | 125 | 140 | 9 Bar / 130 psi | 22 |
| 800.150.PN9.6RJ | 150 | 160 | 9 Bar / 130 psi | 28 |
| 800.175.PN9.6RJ | 175 | 200 | 9 Bar / 130 psi | 10 |
| 800.200.PN9.6RJ | 200 | 225 | 9 Bar / 130 psi | 8 |
| 800.225.PN9.6RJ | 225 | 250 | 9 Bar / 130 psi | 8 |
| 800.250.PN9.6RJ | 250 | 280 | 9 Bar / 130 psi | 6 |
| 800.300.PN9.6RJ | 300 | 315 | 9 Bar / 130 psi | 6 |
| 800.375.PN9.6RJ | 375 | 400 | 9 Bar / 130 psi | 6 |
| 800.450.PN9.6RJ | 450 | 500 | 9 Bar / 130 psi | 6 |
| PN12 (Class "D") | | | | |
| 800.80.PN12.6RJ | 80 | 88.7 | 12 Bar / 174 psi | 57 |
| 800.100.PN12.6RJ | 100 | 114.1 | 12 Bar / 174 psi | 38 |
| 800.125.PN12.6RJ | 125 | 140 | 12 Bar / 174 psi | 22 |
| 800.150.PN12.6RJ | 150 | 160 | 12 Bar / 174 psi | 28 |
| 800.200.PN12.6RJ | 200 | 225 | 12 Bar / 174 psi | 8 |
| 800.250.PN12.6RJ | 250 | 280 | 12 Bar / 174 psi | 6 |
| 800.300.PN12.6RJ | 300 | 315 | 12 Bar / 174 psi | 6 |
| PN15 (Class "E") | | | | |
| 800.200.PN15.6RJ | 200 | 280 | 15 Bar / 225 psi | 8 |



RING JOINT (RJ)



RING JOINT (RJ)



RING JOINT (RJ)

# PVC-U Pressure Pipe Solvent Joint

| RXP Code | Nominal Size (mm) | Outside Diameter (mm) | Pressure Rating @ 20°C | Pack Quantity |
|---|---|---|---|---|
| PN6 (Class "B") | | | | |
| 800.50.PN6.6SJ | 50 | 60.2 | 6 Bar | 150 |
| PN9 (Class "C") | | | | |
| 800.32.PN9.6SJ | 32 | 42.1 | 9 Bar | 264 |
| 800.40.PN9.6SJ | 40 | 48.1 | 9 Bar | 209 |
| 800.50.PN9.6SJ | 50 | 60.2 | 9 Bar | 150 |
| PN12 (Class "D") | | | | |
| 800.32.PN12.6SJ | 32 | 42.1 | 12 Bar | 264 |
| 800.40.PN12.6SJ | 40 | 48.1 | 12 Bar | 209 |
| 800.50.PN12.6SJ | 50 | 60.2 | 12 Bar | 150 |
| 800.65.PN12.6SJ | 65 | 75.2 | 12 Bar | 150 |
| PN15 (Class "E") | | | | |
| 800.15.PN15.6SJ | 15 | 21.2 | 15 Bar | 480 |
| 800.20.PN15.6SJ | 20 | 26.6 | 15 Bar | 656 |
| 800.25.PN15.6SJ | 25 | 33.4 | 15 Bar | 413 |
| 800.32.PN15.6SJ | 32 | 42.1 | 15 Bar | 264 |
| 800.40.PN15.6SJ | 40 | 48.1 | 15 Bar | 209 |
| 800.50.PN15.6SJ | 50 | 60.2 | 15 Bar | 150 |



SOLVENT JOINT (SJ)



SOLVENT JOINT (SJ)



SOLVENT JOINT (SJ)

# STORM-LOCK™ STORMWATER & AGRIDUCT™ CULVERT

## 550 Series PVC-U Culvert Pipe

- Lead free product.

| RXP Code | Nominal Size (mm) | Outside Diameter (mm) | Pipe Length Including Socket | Pack Quantity |
|---|---|---|---|---|
| 550.110.6SJ | 100 | 110 | 6 metres | 60 |
| 550.160.6SJ | 150 | 160 | 6 metres | 28 |
| 550.200.6SJ | 175 | 200 | 6 metres | 20 |
| 550.250.6SJ | 225 | 250 | 6 metres | 12 |
| 550.315.6SJ | 300 | 315 | 6 metres | 6 |
| 550.400.6SJ | 375 | 400 | 6 metres | 6 |
| 550.500.6SJ | 475 | 500 | 6 metres | 4 |



SOCKET JOINT (SJ)

# ACCESORIES

## PVC Primer, Solvent, Lubricant

| RXP Code | Description |
|---|---|
| | Joint Primer |
| RX.PRIMER.4000 | Joint Primer 4 Litre Tin |
| RX.PRIMER.500 | Joint Primer 500ml Pot |




High strength PVC priming fluid used to clean PVC pressure pipe prior to gluing on all classes of PVC pressure pipe and fittings. Recommended for sizes up to 150mm. Easy to apply and coloured pink for quick identification joint has been primed prior to solventing.

| | |
|---|---|
| RX.PRIMER.CL.500 | Joint Primer Clear 500ml Pot |

Easy to apply and in clear where non-staining is required for all visible joints.

| | |
|---|---|
| | Solvent Cement |
| RX.SOLVENT.125 | Solvent Cement Gold 125ml Pot |
| RX.SOLVENT.250 | Solvent Cement Gold 250ml Pot |
| RX.SOLVENT.500 | Solvent Cement Gold 500ml Pot |




Specifically formulated to bond together Drain, Waste & Vent (DWV) pipe, Storm Water and Pressure Pipes systems and helps to ensure a long-lasting, water tight joint is achieved.

| | |
|---|---|
| | Joint Lube |
| RX.LUBE.2000 | Joint Lube 2kg |
| RX.LUBE.500 | Joint Lube 500gm |




Pipe lube should be used for every Rubber Ringed joint pipe. Applied around a clean rubber ring so the pipe is inserted easily and doesn't damage the ring.

# COMPRESSION
## FITTINGS



### COMPRESSION FITTINGS FEATURES:

- Body made from polypropylene.
- Locking ring and sleeve - acetal.
- Sealing ring, nitrile rubber seal.
- UV stabilised, will not breakdown in sunlight.
- BSPT connection threads.
- Robust strong fitting.
- No obstruction to flow.
- Full flow external fit fitting.
- 50mm female fitting has stainless steel reinforcing ring.

### TAPPING SADDLE FEATURES:

- Body made from polypropylene.
- Nylon reinforcing ring.
- Stainless steel nuts and bolts.
- UV stabilised, will not break down in sunlight.
- Female BSPT connection threads.
- Robust strong fitting.
- Easy installation - 2 or 4 bolt options.

### RECOMMENDED WORKING PRESSURE:

- Maximum working pressure 1200 kPa or 173 psi.
- 15mm - 50mm suitable for High Density Pipe manufactured to RX Standard or NZ Standard and Medium Density (MDID) Pipe to RX Standard.




Cut the pipe square, then chamfer.




Slide nut first then locking ring, over the pipe.




Push pipe into fitting, past the collar and o-ring, until pipe sits on ridge.




Slide nut and locking ring up to body and wind up.




Tighten nut with wrench or equivalent.

# COMPRESSION FITTINGS

| RXP Code | Description | Pack Quantity |
|---|---|---|
| | **Straight Coupling** | |
| RXC15 | 15mm Straight Coupling | 10 |
| RXC20 | 20mm Straight Coupling | 10 |
| RXC25 | 25mm Straight Coupling | 10 |
| RXC32 | 32mm Straight Coupling | 5 |
| RXC40 | 40mm Straight Coupling | 2 |
| RXC50 | 50mm Straight Coupling | 2 |



| | | |
|---|---|---|
| | **Male Coupling** | |
| RXMC15 | 15mm Male Coupling x ½" | 10 |
| RXMC20 | 20mm Male Coupling x ¾" | 10 |
| RXMC25 | 25mm Male Coupling x 1" | 10 |
| RXMC32 | 32mm Male Coupling x 1 ¼" | 10 |
| RXMC40 | 40mm Male Coupling x 1 ½" | 5 |
| RXMC50 | 50mm Male Coupling x 2" | 2 |



| | | |
|---|---|---|
| | **Female Coupling** | |
| RXFC15 | 15mm Female Coupling x ½" | 10 |
| RXFC20 | 20mm Female Coupling x ¾" | 10 |
| RXFC25 | 25mm Female Coupling x 1" | 10 |
| RXFC32 | 32mm Female Coupling x 1 ¼" | 10 |
| RXFC40 | 40mm Female Coupling x 1 ½" | 5 |
| RXFC50 | 50mm Female Coupling x 2" | 2 |



| | | |
|---|---|---|
| | **Equal Tee** | |
| RXT15 | 15mm Equal Tee | 10 |
| RXT20 | 20mm Equal Tee | 5 |
| RXT25 | 25mm Equal Tee | 5 |
| RXT32 | 32mm Equal Tee | 2 |
| RXT40 | 40mm Equal Tee | 2 |
| RXT50 | 50mm Equal Tee | 2 |



| | | |
|---|---|---|
| | **Female Tee** | |
| RXFT15 | 15mm Female Tee x ½" | 10 |
| RXFT20 | 20mm Female Tee x ¾" | 5 |
| RXFT25 | 25mm Female Tee x 1" | 5 |
| RXFT32 | 32mm Female Tee x 1 ¼" | 2 |
| RXFT40 | 40mm Female Tee x 1 ½" | 2 |
| RXFT50 | 50mm Female Tee x 2" | 2 |



# COMPRESSION FITTINGS

| RXP Code | Description | Pack Quantity |
|---|---|---|
| | **Female 90° Elbow** | |
| RXFE15 | 15mm Female 90° Elbow x ½" | 10 |
| RXFE20 | 20mm Female 90° Elbow x ¾" | 10 |
| RXFE25 | 25mm Female 90° Elbow x 1" | 5 |
| RXFE32 | 32mm Female 90° Elbow x 1 ¼" | 2 |
| RXFE40 | 40mm Female 90° Elbow x 1 ½" | 2 |
| RXFE50 | 50mm Female 90° Elbow x 2" | 2 |



| | | |
|---|---|---|
| | **90° Elbow** | |
| RXE15 | 15mm 90° Elbow | 10 |
| RXE20 | 20mm 90° Elbow | 10 |
| RXE25 | 25mm 90° Elbow | 5 |
| RXE32 | 32mm 90° Elbow | 2 |
| RXE40 | 40mm 90° Elbow | 2 |
| RXE50 | 50mm 90° Elbow | 2 |



| | | |
|---|---|---|
| | **Male 90° Elbow** | |
| RXME15 | 15mm Male 90° Elbow x ½" | 10 |
| RXME20 | 20mm Male 90° Elbow x ¾" | 10 |
| RXME25 | 25mm Male 90° Elbow x 1" | 5 |



| | | |
|---|---|---|
| | **Compression O-Ring** | |
| SOR15 | 15mm Compression O-Ring | 10 |
| SOR20 | 20mm Compression O-Ring | 10 |
| SOR25 | 25mm Compression O-Ring | 10 |
| SOR32 | 32mm Compression O-Ring | 10 |
| SOR40 | 40mm Compression O-Ring | 10 |
| SOR50 | 50mm Compression O-Ring | 10 |



| | | |
|---|---|---|
| | **Compression Nut** | |
| SCN15 | 15mm Compression Nut | 10 |
| SCN20 | 20mm Compression Nut | 10 |
| SCN25 | 25mm Compression Nut | 10 |
| SCN32 | 32mm Compression Nut | 10 |
| SCN40 | 40mm Compression Nut | 10 |
| SCN50 | 50mm Compression Nut | 10 |



| | | |
|---|---|---|
| | **Compression Locking Ring** | |
| SLR15 | 15mm Compression Locking Ring | 10 |
| SLR20 | 20mm Compression Locking Ring | 10 |
| SLR25 | 25mm Compression Locking Ring | 10 |
| SLR32 | 32mm Compression Locking Ring | 10 |
| SLR40 | 40mm Compression Locking Ring | 10 |
| SLR50 | 50mm Compression Locking Ring | 10 |



# COMPRESSION FITTINGS

| RXP Code | Description | Pack Quantity |
|---|---|---|
| | **Compression Sleeve** | |
| SCS15 | 15mm Compression Sleeve | 10 |
| SCS20 | 20mm Compression Sleeve | 10 |
| SCS25 | 25mm Compression Sleeve | 10 |
| SCS32 | 32mm Compression Sleeve | 10 |
| SCS40 | 40mm Compression Sleeve | 10 |
| SCS50 | 50mm Compression Sleeve | 10 |



## Tapping Saddles

| RXP Code | Description | Pack Quantity |
|---|---|---|
| | **Tapping Saddle 2 Bolt** | |
| RXTS2015 | 20mm x 15mm Take-off Tapping Saddle (2 Bolt) | 10 |
| RXTS2020 | 20mm x 20mm Take-off Tapping Saddle (2 Bolt) | 10 |
| RXTS2515 | 25mm x 15mm Take-off Tapping Saddle (2 Bolt) | 10 |
| RXTS2520 | 25mm x 20mm Take-off Tapping Saddle (2 Bolt) | 10 |
| RXTS3215 | 32mm x 15mm Take-off Tapping Saddle (2 Bolt) | 10 |
| RXTS3220 | 32mm x 20mm Take-off Tapping Saddle (2 Bolt) | 10 |



| | | |
|---|---|---|
| | **Tapping Saddle 4 Bolt** | |
| RXTS4015 | 40mm x 15mm Take-off Tapping Saddle (4 Bolt) | 10 |
| RXTS4020 | 40mm x 20mm Take-off Tapping Saddle (4 Bolt) | 10 |
| RXTS4025 | 40mm x 25mm Take-off Tapping Saddle (4 Bolt) | 10 |
| RXTS4032 | 40mm x 32mm Take-off Tapping Saddle (4 Bolt) | 10 |
| RXTS5015 | 50mm x 15mm Take-off Tapping Saddle (4 Bolt) | 10 |
| RXTS5020 | 50mm x 20mm Take-off Tapping Saddle (4 Bolt) | 10 |
| RXTS5025 | 50mm x 25mm Take-off Tapping Saddle (4 Bolt) | 10 |
| RXTS5032 | 50mm x 32mm Take-off Tapping Saddle (4 Bolt) | 10 |



# BSP THREADED
## FITTINGS



## FEATURES:

- Meets the requirements for potable water quality AS/NZS 4020.
- Suitable for use above or below ground.
- UV stabilised, will not break down in sunlight.
- BSP and BSPT threads.
- Tough threads that won't distort.
- Robust, strong and long lasting.
- Suitable for use with water.
- No corrosion risk.
- Superior joint sealing.

## INSTALLATION:

- First apply an adequate cover of thread tape to the length of the thread.
- Insert the thread covered with tape into a corresponding thread (i.e. male inserts into female thread or vice versa).
- Tighten until secure.

***RXP recommends the use of thread tape or sealant on all threaded connections.***



## WORKING PRESSURE:

**MAXIMUM WORKING PRESSURE AT 20°C**

- **Tefen Brand**
  6mm-10mm (⅛"-⅜")
  1400kPa ( 200 psi, 14 Bar)

- **RXP Brand**
  15mm-50mm (½"-2")
  1600kPa (235 psi, 16 Bar)
  65mm-100mm (2½"-4")
  1000kPa (145 psi, 10 Bar)

- **Philmac Brand**
  15mm-50mm (½"-2")
  1600kPa (235 psi, 16 Bar)
  65mm (2½")
  1200kPa (174 psi, 12 Bar)
  80mm-100mm (3"-4")
  1000kPa (145 psi, 10 Bar)



# BSP THREADED FITTINGS

| RXP Code | Description | Philmac Code | Pack Quantity |
|---|---|---|---|
| | **Hex Nipple** | | |
| RXHN06 | 6mm Hex Nipple (⅛") | | 10 |
| RXHN08 | 8mm Hex Nipple (¼") | | 10 |
| RXHN10 | 10mm Hex Nipple (⅜") | | 10 |
| RXHN15 | 15mm Hex Nipple (½") | 90421100 | 10 |
| RXHN20 | 20mm Hex Nipple (¾") | 90422200 | 10 |
| RXHN25 | 25mm Hex Nipple (1") | 90423300 | 10 |
| RXHN32 | 32mm Hex Nipple (1¼") | 90424400 | 10 |
| RXHN40 | 40mm Hex Nipple (1½") | 90425500 | 10 |
| RXHN50 | 50mm Hex Nipple (2") | 90426600 | 10 |
| RXHN65 | 65mm Hex Nipple (2½") | 90427700 | 1 |
| RXHN80 | 80mm Hex Nipple (3") | 90428800 | 1 |
| RXHN100 | 100mm Hex Nipple (4") | 90420000 | 1 |
| | **Reducing Hex Nipple** | | |
| RXRHN0806 | 8 x 6mm Reducing Hex Nipple (¼" x ⅛") | | 10 |
| RXRHN1006 | 10 x 6mm Reducing Hex Nipple (⅜" x ⅛") | | 10 |
| RXRHN1008 | 10 x 8mm Reducing Hex Nipple (⅜" x ¼") | | 10 |
| RXRHN1508 | 15 x 8mm Reducing Hex Nipple (½" x ¼") | | 10 |
| RXRHN1510 | 15 x 10mm Reducing Hex Nipple (½" x ⅜") | | 10 |
| RXRHN2015 | 20 x 15mm Reducing Hex Nipple (¾" x ½") | 90422100 | 10 |
| RXRHN2515 | 25 x 15mm Reducing Hex Nipple (1" x ½") | 90423100 | 10 |
| RXRHN2520 | 25 x 20mm Reducing Hex Nipple (1" x ¾" ) | 90423200 | 10 |
| RXRHN3220 | 32 x 20mm Reducing Hex Nipple (1¼" x ¾") | 90424200 | 10 |
| RXRHN3225 | 32 x 25mm Reducing Hex Nipple (1¼" x 1") | 90424300 | 10 |
| RXRHN4020 | 40 x 20mm Reducing Hex Nipple (1½" x ¾") | 90425200 | 10 |
| RXRHN4025 | 40 x 25mm Reducing Hex Nipple (1½" x 1") | 90425300 | 10 |
| RXRHN4032 | 40 x 32mm Reducing Hex Nipple (1½" x 1¼") | 90425400 | 10 |
| RXRHN5020 | 50 x 20mm Reducing Hex Nipple (2" x ¾") | 90426200 | 10 |
| RXRHN5025 | 50 x 25mm Reducing Hex Nipple (2" x 1") | 90426300 | 10 |
| RXRHN5032 | 50 x 32mm Reducing Hex Nipple (2" x 1¼") | 90426400 | 10 |
| RXRHN5040 | 50 x 40mm Reducing Hex Nipple (2" x 1½") | 90426500 | 10 |
| RXRHN6532 | 65 x 32mm Reducing Hex Nipple (2½" x 1¼") | 90427400 | 1 |
| RXRHN6540 | 65 x 40mm Reducing Hex Nipple (2½" x 1½") | 90427500 | 1 |
| RXRHN6550 | 65 x 50mm Reducing Hex Nipple (2½" x 2") | 90427600 | 1 |
| RXRHN8040 | 80 x 40mm Reducing Hex Nipple (3" x 1½") | 90428500 | 1 |
| RXRHN8050 | 80 x 50mm Reducing Hex Nipple (3" x 2") | 90428600 | 10 |
| RXRHN10050 | 100 x 50mm Reducing Hex Nipple (4" x 2") | 90420600 | 10 |
| RXRHN10065 | 100 x 65mm Reducing Hex Nipple (4" x 2½") | 90420700 | 10 |
| RXRHN10080 | 100 x 80mm Reducing Hex Nipple (4" x 3") | 90420800 | 10 |











# BSP THREADED FITTINGS

| RXP Code | Description | Philmac Code | Pack Quantity |
|---|---|---|---|
| | **Hex Socket** | | |
| RXHS06 | 6mm Hex Socket (⅛") | | 10 |
| RXHS08 | 8mm Hex Socket (¼") | | 10 |
| RXHS10 | 10mm Hex Socket (⅜") | | 10 |
| RXHS15 | 15mm Hex Socket (½") | 90431100 | 10 |
| RXHS20 | 20mm Hex Socket (¾") | 90432200 | 10 |
| RXHS25 | 25mm Hex Socket (1") | 90433300 | 10 |
| RXHS32 | 32mm Hex Socket (1¼") | 90434400 | 10 |
| RXHS40 | 40mm Hex Socket (1½") | 90435500 | 10 |
| RXHS50 | 50mm Hex Socket (2") | 90436600 | 10 |
| RXHS65 | 65mm Hex Socket (2½") | 90437700 | 1 |
| RXHS80 | 80mm Hex Socket (3") | 90438800 | 1 |
| RXHS100 | 100mm Hex Socket (4") | 90430000 | 1 |
| | **Reducing Hex Socket** | | |
| RXRHS0806 | 8 x 6mm Reducing Hex Socket (¼" x ⅛") | | 10 |
| RXRHS1006 | 10 x 6mm Reducing Hex Socket (⅜" x ⅛") | | 10 |
| RXRHS1008 | 10 x 8mm Reducing Hex Socket (⅜" x ¼") | | 10 |
| RXRHS1508 | 15 x 8mm Reducing Hex Socket (½" x ¼") | | 10 |
| RXRHS1510 | 15 x 10mm Reducing Hex Socket (½" x ⅜") | | 10 |
| RXRHS2008 | 20 x 8mm Reducing Hex Socket (¾" x ¼") | | 10 |
| RXRHS2015 | 20 x 15mm Reducing Hex Socket (¾" x ½") | 90432100 | 10 |
| RXRHS2515 | 25 x 15mm Reducing Hex Socket (1" x ½") | 90433100 | 10 |
| RXRHS2520 | 25 x 20mm Reducing Hex Socket (1" x ¾") | 90433200 | 10 |
| RXRHS3220 | 32 x 20mm Reducing Hex Socket (1¼" x ¾") | 90434200 | 10 |
| RXRHS3225 | 32 x 25 mm Reducing Hex Socket (1¼" x 1") | 90434300 | 10 |
| RXRHS4020 | 40 x 20mm Reducing Hex Socket (1½" x ¾") | 90435200 | 10 |
| RXRHS4025 | 40 x 25mm Reducing Hex Socket (1½" x 1") | 90435300 | 10 |
| RXRHS4032 | 40 x 32mm Reducing Hex Socket (1½" x 1¼") | 90435400 | 10 |
| RXRHS5020 | 50 x 20mm Reducing Hex Socket (2" x ¾") | 90436200 | 10 |
| RXRHS5025 | 50 x 25mm Reducing Hex Socket (2" x 1") | 90436300 | 10 |
| RXRHS5032 | 50 x 32mm Reducing Hex Socket (2" x 1¼") | 90436400 | 10 |
| RXRHS5040 | 50 x 40mm Reducing Hex Socket (2" x 1½") | 90436500 | 10 |
| RXRHS6540 | 65 x 40mm Reducing Hex Socket (2½" x 1½") | 90437500 | |
| RXRHS6550 | 65 x 50mm Reducing Hex Socket (2½" x 2") | 90437600 | |
| RXRHS8050 | 80 x 50mm Reducing Hex Socket (3" x 2") | 90438600 | |
| RXRHS8065 | 80 x 65mm Reducing Hex Socket (3" x 2½") | 90438700 | |
| RXRHS10065 | 100 x 65mm Reducing Hex Socket (4" x 2½") | 90430700 | |
| RXRHS10080 | 100 x 80mm Reducing Hex Socket (4" x 3") | 90430800 | |













# BSP THREADED FITTINGS

| RXP Code | Description | Philmac Code | Pack Quantity |
|---|---|---|---|
| | **Reducing Bush** | | |
| RXRB0806 | 8 x 6mm Reducing Bush (¼" x ⅛") | | 10 |
| RXRB1006 | 10 x 6mm Reducing Bush (⅜" x ⅛") | | 10 |
| RXRB1008 | 10 x 8mm Reducing Bush (⅜" x ¼") | | 10 |
| RXRB1506 | 15 x 6mm Reducing Bush (½" x ⅛") | | 10 |
| RXRB1508 | 15 x 8mm Reducing Bush (½" x ¼") | | 10 |
| RXRB1510 | 15 x 10mm Reducing Bush (½" x ⅜") | | 10 |
| RXRB2008 | 20 x 8mm Reducing Bush (¾" x ¼") | | 10 |
| RXRB2010 | 20 x 10mm Reducing Bush (¾" x ⅜") | | 10 |
| RXRB2015 | 20 x 15mm Reducing Bush (¾" x ½") | 90412100 | 10 |
| RXRB2515 | 25 x 15mm Reducing Bush (1" x ½") | 90413100 | 10 |
| RXRB2520 | 25 x 20mm Reducing Bush (1" x ¾" ) | 90413200 | 10 |
| RXRB3220 | 32 x 20mm Reducing Bush (1¼" x ¾") | 90414200 | 10 |
| RXRB3225 | 32 x 25mm Reducing Bush (1¼" x 1") | 90414300 | 10 |
| RXRB4020 | 40 x 20mm Reducing Bush (1½" x ¾") | 90415200 | 10 |
| RXRB4025 | 40 x 25mm Reducing Bush (1½" x 1") | 90415300 | 10 |
| RXRB4032 | 40 x 32mm Reducing Bush (1½" x 1¼") | 90415400 | 10 |
| RXRB5020 | 50 x 20mm Reducing Bush (2" x ¾") | 90416200 | 10 |
| RXRB5025 | 50 x 25mm Reducing Bush (2" x 1") | 90416300 | 10 |
| RXRB5032 | 50 x 32mm Reducing Bush (2" x 1¼") | 90416400 | 10 |
| RXRB5040 | 50 x 40mm Reducing Bush (2" x 1½") | 90416500 | 10 |
| RXRB6532 | 65 x 32mm Reducing Bush (2½" x 1¼") | 90417400 | |
| RXRB6540 | 65 x 40mm Reducing Bush (2½" x 1½") | 90417500 | |
| RXRB6550 | 65 x 50mm Reducing Bush (2½" x 2") | 90417600 | |
| RXRB8040 | 80 x 40mm Reducing Bush (3" x 1½") | 90418500 | |
| RXRB8050 | 80 x 50mm Reducing Bush (3" x 2") | 90418600 | 10 |
| RXRB8065 | 80 x 65mm Reducing Bush (3" x 2½") | 90418700 | 10 |
| RXRB10050 | 100 x 50mm Reducing Bush (4" x 2") | 90410600 | 10 |
| RXRB10065 | 100 x 65mm Reducing Bush (4" x 2½") | 90410700 | |
| RXRB10080 | 100 x 80mm Reducing Bush (4" x 3") | 90410800 | 10 |
| | **Threaded Female Tee** | | |
| RXTFT15 | 15mm Threaded Female Tee (½") | 90451100 | 10 |
| RXTFT20 | 20mm Threaded Female Tee (¾") | 90452200 | 10 |
| RXTFT25 | 25mm Threaded Female Tee (1") | 90453300 | 10 |
| RXTFT32 | 32mm Threaded Female Tee (1¼") | 90454400 | 5 |
| RXTFT40 | 40mm Threaded Female Tee (1½") | 90455500 | 5 |
| RXTFT50 | 50mm Threaded Female Tee (2") | 90456600 | 2 |
| RXTFT65 | 65mm Threaded Female Tee (2½") | 90457700 | 1 |
| RXTFT80 | 80mm Threaded Female Tee (3") | 90458800 | 1 |
| RXTFT100 | 100mm Threaded Female Tee (4") | 90450000 | 1 |











# BSP THREADED FITTINGS

| RXP Code | Description | Philmac Code | Pack Quantity |
|---|---|---|---|
| | **Threaded 90° Female Elbow** | | |
| RXTFE15 | 15mm Threaded 90° Female Elbow (½") | 90461100 | 10 |
| RXTFE20 | 20mm Threaded 90° Female Elbow (¾") | 90462200 | 10 |
| RXTFE25 | 25mm Threaded 90° Female Elbow (1") | 90463300 | 10 |
| RXTFE32 | 32mm Threaded 90° Female Elbow (1¼") | 90464400 | 10 |
| RXTFE40 | 40mm Threaded 90° Female Elbow (1½") | 90465500 | 5 |
| RXTFE50 | 50mm Threaded 90° Female Elbow (2") | 90466600 | 2 |



| | | | |
|---|---|---|---|
| RXTFE65 | 65mm Threaded 90° Female Elbow (2 ½") | 90467700 | 1 |
| RXTFE80 | 80mm Threaded 90° Female Elbow (3") | 90468800 | 1 |
| RXTFE100 | 100mm Threaded 90° Female Elbow (4") | 90460000 | 1 |



| | | |
|---|---|---|
| | **Threaded 90° Male Elbow** | |
| RXTME06 | 6mm Threaded 90° Male Elbow (⅛") | 10 |
| RXTME08 | 8mm Threaded 90° Male Elbow (¼") | 10 |
| RXTME10 | 10mm Threaded 90° Male Elbow (⅜") | 10 |



| | | | |
|---|---|---|---|
| | **Threaded 90° Male/Female Elbow** | | |
| RXTMFE15 | 15mm Threaded 90° Male/Female Elbow (½") | 90469100 | 10 |
| RXTMFE20 | 20mm Threaded 90° Male/Female Elbow (¾") | 90469200 | 10 |
| RXTMFE25 | 25mm Threaded 90° Male/Female Elbow (1") | 90469300 | 10 |
| RXTMFE32 | 32mm Threaded 90° Male/Female Elbow (1¼") | 90469400 | 10 |
| RXTMFE40 | 40mm Threaded 90° Male/Female Elbow (1½") | 90469500 | 5 |
| RXTMFE50 | 50mm Threaded 90° Male/Female Elbow (2") | 90469600 | 2 |



| | | |
|---|---|---|
| | **Cap and Washer** | |
| RXC/W15 | 15mm Cap and Washer (½") | 10 |
| RXC/W20 | 20mm Cap and Washer (¾") | 10 |
| RXC/W25 | 25mm Cap and Washer (1") | 10 |
| RXC/W32 | 32mm Cap and Washer (1¼") | 10 |
| RXC/W40 | 40mm Cap and Washer (1½") | 10 |
| RXC/W50 | 50mm Cap and Washer (2") | 10 |



| | | |
|---|---|---|
| | **Cap - No Washer** | |
| RXCP06 | 6mm Cap (⅛") - No Washer | 10 |
| RXCP08 | 8mm Cap (¼") - No Washer | 10 |
| RXCP10 | 10mm Cap (⅜") - No Washer | 10 |



# BSP THREADED FITTINGS

| RXP Code | Description | Philmac Code | Pack Quantity |
|---|---|---|---|
| | **Cap - No Washer** | | |
| RXCP15 | 15mm Cap (½") - No Washer | 90490100 | 10 |
| RXCP20 | 20mm Cap (¾") - No Washer | 90490200 | 10 |
| RXCP25 | 25mm Cap (1") - No Washer | 90490300 | 10 |
| RXCP32 | 32mm Cap (1¼") - No Washer | 90490400 | 10 |
| RXCP40 | 40mm Cap (1½") - No Washer | 90490500 | 10 |
| RXCP50 | 50mm Cap (2") - No Washer | 90490600 | 10 |



| | | | |
|---|---|---|---|
| RXCP65 | 65mm Cap (2½") - No Washer | 90490700 | 1 |
| RXCP80 | 80mm Cap (3") - No Washer | 90490800 | 1 |
| RXCP100 | 100mm Cap (4") - No Washer | 90490000 | 1 |



| | | |
|---|---|---|
| | **Tank Fitting and Back Nut** | |
| RXTF15 | 15mm Tank Fitting and Back Nut (½") | 10 |
| RXTF20 | 20mm Tank Fitting and Back Nut (¾") | 10 |
| RXTF25 | 25mm Tank Fitting and Back Nut (1") | 10 |
| RXTF32 | 32mm Tank Fitting and Back Nut (1¼") | 10 |
| RXTF40 | 40mm Tank Fitting and Back Nut (1½") | 10 |
| RXTF50 | 50mm Tank Fitting and Back Nut (2") | 5 |



| | | |
|---|---|---|
| | **Male Threaded Tank Inlet** | |
| RXTTI15 | 15mm Male Threaded Tank Inlet (½") | 5 |
| RXTTI20 | 20mm Male Threaded Tank Inlet (¾") | 5 |
| RXTTI25 | 25mm Male Threaded Tank Inlet (1") | 5 |
| RXTTI32 | 32mm Male Threaded Tank Inlet (1¼") | 5 |
| RXTTI40 | 40mm Male Threaded Tank Inlet (1½") | 5 |
| RXTTI50 | 50mm Male Threaded Tank Inlet (2") | 5 |



| | | |
|---|---|---|
| | **RXTTI Back Nut** | |
| RXTTIBN15 | 15mm RXTTI Back Nut (½") | 1 |
| RXTTIBN20 | 20mm RXTTI Back Nut (¾") | 1 |
| RXTTIBN25 | 25mm RXTTI Back Nut (1") | 1 |
| RXTTIBN32 | 32mm RXTTI Back Nut (1¼") | 1 |
| RXTTIBN40 | 40mm RXTTI Back Nut (1½") | 1 |
| RXTTIBN50 | 50mm RXTTI Back Nut (2") | 1 |



| | | |
|---|---|---|
| | **RXTTI Washer** | |
| RXTTIW15 | 15mm RXTTI Washer (½") | 1 |
| RXTTIW20 | 20mm RXTTI Washer (¾") | 1 |
| RXTTIW25 | 25mm RXTTI Washer (1") | 1 |
| RXTTIW32 | 32mm RXTTI Washer (1¼") | 1 |
| RXTTIW40 | 40mm RXTTI Washer (1½") | 1 |
| RXTTIW50 | 50mm RXTTI Washer (2") | 1 |



# BSP THREADED FITTINGS

| RXP Code | Description | Philmac Code | Pack Quantity |
|---|---|---|---|
| | **Hex Plug** | | |
| RXHP06 | 6mm Hex Plug (⅛") | | 10 |
| RXHP08 | 8mm Hex Plug (¼") | | 10 |
| RXHP10 | 10mm Hex Plug (⅜") | | 10 |
| RXHP15 | 15mm Hex Plug (½") | 90401100 | 10 |
| RXHP20 | 20mm Hex Plug (¾") | 90402200 | 10 |
| RXHP25 | 25mm Hex Plug (1") | 90403300 | 10 |
| RXHP32 | 32mm Hex Plug (1¼") | 90404400 | 10 |
| RXHP40 | 40mm Hex Plug (1½") | 90405500 | 10 |
| RXHP50 | 50mm Hex Plug (2") | 90406600 | 10 |
| RXHP65 | 65mm Hex Plug (2½") | 90407700 | 10 |
| RXHP80 | 80mm Hex Plug (3") | 90408800 | 10 |
| RXHP100 | 100mm Hex Plug (4") | 90400000 | 10 |
| | **RXTF Back Nut** | | |
| RXBN15 | 15mm RXTF Back Nut (½") | | 10 |
| RXBN20 | 20mm RXTF Back Nut (¾") | | 10 |
| RXBN25 | 25mm RXTF Back Nut (1") | | 10 |
| RXBN32 | 32mm RXTF Back Nut (1¼") | | 10 |
| RXBN40 | 40mm RXTF Back Nut (1½") | | 10 |
| RXBN50 | 50mm RXTF Back Nut (2") | | 10 |
| | **Hose Tail Elbow** | | |
| RXHTE06.4MM | 6 x 4mm Hose Tail Elbow (⅛" x 4mm) | | 10 |
| RXHTE08.6MM | 8 x 6mm Hose Tail Elbow (¼" x 6mm) | | 10 |
| RXHTE10.8MM | 10 x 8mm Hose Tail Elbow (⅜" x 8mm) | | 10 |
| RXHTE10.10MM | 10 x 10mm Hose Tail Elbow (⅜" x 10mm) | | 10 |
| | **Hose Tail** | | |
| RXHT06.4MM | 6 x 4mm Hose Tail (⅛" x 4mm) | | 10 |
| RXHT06.6MM | 6 x 6mm Hose Tail (⅛" x 6mm) | | 10 |
| RXHT08.6MM | 8 x 6mm Hose Tail (¼" x 6mm) | | 10 |
| RXHT08.8MM | 8 x 8mm Hose Tail (¼" x 8mm) | | 10 |
| RXHT08.10MM | 8 x 10mm Hose Tail (¼" x 10mm) | | 10 |
| RXHT10.10MM | 10 x 10mm Hose Tail (⅜" x 10mm) | | 5 |
| RXHT15 | 15mm Hose Tail (½") | | 10 |
| RXHT20 | 20mm Hose Tail (¾") | | 10 |
| RXHT25 | 25mm Hose Tail (1") | | 10 |
| RXHT32 | 32mm Hose Tail (1¼") | | 10 |
| RXHT40 | 40mm Hose Tail (1½") | | 10 |
| RXHT50 | 50mm Hose Tail (2") | | 5 |















# BSP THREADED FITTINGS

| RXP Code | Description | Pack Quantity |
|---|---|---|
| | **Hose Tail Long** | |
| RXHT32.32MM.LONG | 32 x 32mm Hose Tail Long (1¼" x 32mm) | 10 |
| RXHT40.40MM.LONG | 40 x 40mm Hose Tail Long (1½" x 40mm) | 10 |
| | **Female Nut & Tail** | |
| RXTFNT20.6MM | 20 x 6mm Female Nut & Tail (¾" x 6mm) | 10 |
| RXTFNT20.8MM | 20 x 8mm Female Nut & Tail (¾" x 8mm) | 10 |
| RXTFNT20.10MM | 20 x 10mm Female Nut & Tail (¾" x 10mm) | 10 |
| | **Female Quick-Lock Coupling** | |
| AQLCF20 | 20mm Female Quick-Lock Coupling (¾") | 10 |
| AQLCF25 | 25mm Female Quick-Lock Coupling (1") | 10 |
| AQLCF32 | 32mm Female Quick-Lock Coupling (1¼") | 10 |
| AQLCF40 | 40mm Female Quick-Lock Coupling (1½") | 10 |
| | **Male Quick-Lock Coupling** | |
| AQLCM20 | 20mm Male Quick-Lock Coupling (¾") | 10 |
| AQLCM25 | 25mm Male Quick-Lock Coupling (1") | 10 |
| AQLCM32 | 32mm Male Quick-Lock Coupling (1¼") | 10 |
| AQLCM40 | 40mm Male Quick-Lock Coupling (1½") | 10 |
| AQLCR | Spare Seal Ring | 1 |
| | **Swivel** | |
| ASW25 | 25mm Swivel (1") | 10 |
| ASW32 | 32mm Swivel (1¼") | 5 |
| ASW40 | 40mm Swivel (1½") | 5 |
| ASW50 | 50mm Swivel (2") | 5 |
| | **Pipe Union** | |
| APU20 | 20mm Pipe Union (¾") | 10 |
| APU25 | 25mm Pipe Union (1") | 10 |
| APU32 | 32mm Pipe Union (1¼") | 5 |
| APU40 | 40mm Pipe Union (1½") | 5 |
| APU50 | 50mm Pipe Union (2") | 5 |















*32mm and 40mm Swivel can be used with hose nozzles or K-Line up to a maximum working pressure of 70 psi.

# BSP THREADED FITTINGS

## Polyprop Risers



| RXP Code | Description | Pressure Rating @20°C |
|---|---|---|
| | Polyprop Riser Lengths - No Threads | |
| RXPPL15.05 | 15mm Polyprop Riser Length x 5Mts | |
| RXPPL20.05 | 20mm Polyprop Riser Length x 5Mts | |
| RXPPL25.05 | 25mm Polyprop Riser Length x 5Mts | |
| RXPPL32.05 | 32mm Polyprop Riser Length x 5Mts | |
| RXPPL40.05 | 40mm Polyprop Riser Length x 5Mts | |
| RXPPL50.05 | 50mm Polyprop Riser Length x 5Mts | |

Other lengths are available on request however a minimum order of 20 lengths would be required to run these non-stock items.



| | | |
|---|---|---|
| | Polyprop Risers - Threaded Lengths | |
| RXPPR15.150 | 15mm Polyriser x 150mm (6”) | 1500 kPa |
| RXPPR15.200 | 15mm Polyriser x 200mm (8”) | 1500 kPa |
| RXPPR15.300 | 15mm Polyriser x 300mm (12”) | 1500 kPa |
| RXPPR15.450 | 15mm Polyriser x 450mm (18”) | 1500 kPa |
| RXPPR15.600 | 15mm Polyriser x 600mm (24”) | 1500 kPa |
| RXPPR15.900 | 15mm Polyriser x 900mm (36”) | 1500 kPa |
| RXPPR15.1200 | 15mm Polyriser x 1200mm (48”) | 1500 kPa |
| | | |
| RXPPR20.100 | 20mm Polyriser x 100mm (4”) | 1500 kPa |
| RXPPR20.150 | 20mm Polyriser x 150mm (6”) | 1500 kPa |
| RXPPR20.200 | 20mm Polyriser x 200mm (8”) | 1500 kPa |
| RXPPR20.300 | 20mm Polyriser x 300mm (12”) | 1500 kPa |
| RXPPR20.450 | 20mm Polyriser x 450mm (18”) | 1500 kPa |
| RXPPR20.600 | 20mm Polyriser x 600mm (24”) | 1500 kPa |
| RXPPR20.900 | 20mm Polyriser x 900mm (36”) | 1500 kPa |
| RXPPR20.1200 | 20mm Polyriser x 1200mm (48”) | 1500 kPa |
| | | |
| RXPPR25.100 | 25mm Polyriser x 100mm (4”) | 1500 kPa |
| RXPPR25.150 | 25mm Polyriser x 150mm (6”) | 1500 kPa |
| RXPPR25.200 | 25mm Polyriser x 200mm (8”) | 1500 kPa |
| RXPPR25.300 | 25mm Polyriser x 300mm (12”) | 1500 kPa |
| RXPPR25.400 | 25mm Polyriser x 400mm (15”) | 1500 kPa |
| RXPPR25.450 | 25mm Polyriser x 450mm (18”) | 1500 kPa |
| RXPPR25.600 | 25mm Polyriser x 600mm (24”) | 1500 kPa |
| RXPPR25.900 | 25mm Polyriser x 900mm (36”) | 1500 kPa |
| RXPPR25.1200 | 25mm Polyriser x 1200mm (48”) | 1500 kPa |

# BSP THREADED FITTINGS

| RXP Code | Description | Pressure Rating @20°C |
|---|---|---|
| | Polyprop Risers - Threaded Lengths | |
| RXPPR32.150 | 32mm Polyriser x 150mm (6”) | 1500 kPa |
| RXPPR32.200 | 32mm Polyriser x 200mm (8”) | 1500 kPa |
| RXPPR32.300 | 32mm Polyriser x 300mm (12”) | 1500 kPa |
| RXPPR32.450 | 32mm Polyriser x 450mm (18”) | 1500 kPa |
| RXPPR32.600 | 32mm Poly Riser x 600mm (24”) | 1500 kPa |
| | | |
| RXPPR40.300 | 40mm Polyriser x 300mm (12”) | 1200 kPa |
| RXPPR40.450 | 40mm Polyriser x 450mm (18”) | 1200 kPa |
| RXPPR40.600 | 40mm Polyriser x 600mm (24”) | 1200 kPa |
| | | |
| RXPPR50.150 | 50mm Polyriser x 150mm (6”) | 1000 kPa |
| RXPPR50.300 | 50mm Polyriser x 300mm (12”) | 1000 kPa |
| RXPPR50.450 | 50mm Polyriser x 450mm (18”) | 1000 kPa |
| RXPPR50.600 | 50mm Polyriser x 600mm (24”) | 1000 kPa |





# Metric Compression Fittings

## Simply Slide and Tighten™ for a reliable connection you can trust!

Philmac's range of metric compression fittings are the solution for the perfect connection every time thanks to Philmac's unique Slide and Tighten™ technology. Each fitting is pre-assembled and ready to use so there's no need to disassemble the fittings or prepare the pipe prior to use. Simply cut the PE pipe square and slide it into the fitting until you feel the first point of resistance and then tighten the nut to the flange on the body of the fitting.

With Philmac's metric compression fittings, just slide and tighten and the job's done!



**No loose components**
Grip ring and seal remain captive in the body when the nut is removed.

**Visual stop**
The flange on the body of the fitting acts as a visual cue to indicate when the nut is fully tightened. Once the nut touches the flange on the body, the fitting is in a fully tightened state.

1



Cut the pipe square, there is no need to chamfer or lubricate the pipe.

2



Ensure 2 threads are showing and simply slide the pipe in until the first point of resistance is felt.

3



Tighten the nut by hand, and then with a wrench to the point where the nut is touching the flange on the body of the fitting. Do not tighten beyond this point.

Philmac

The connection you can trust.

### Interchangeability

Safelok and 3G® Metric components are all interchangeable as they share a common body.

### Made from Advanced Materials

The fitting is manufactured from lightweight, high performance thermoplastic materials with outstanding impact, UV and corrosion resistance. The materials used are non-toxic and taint free.

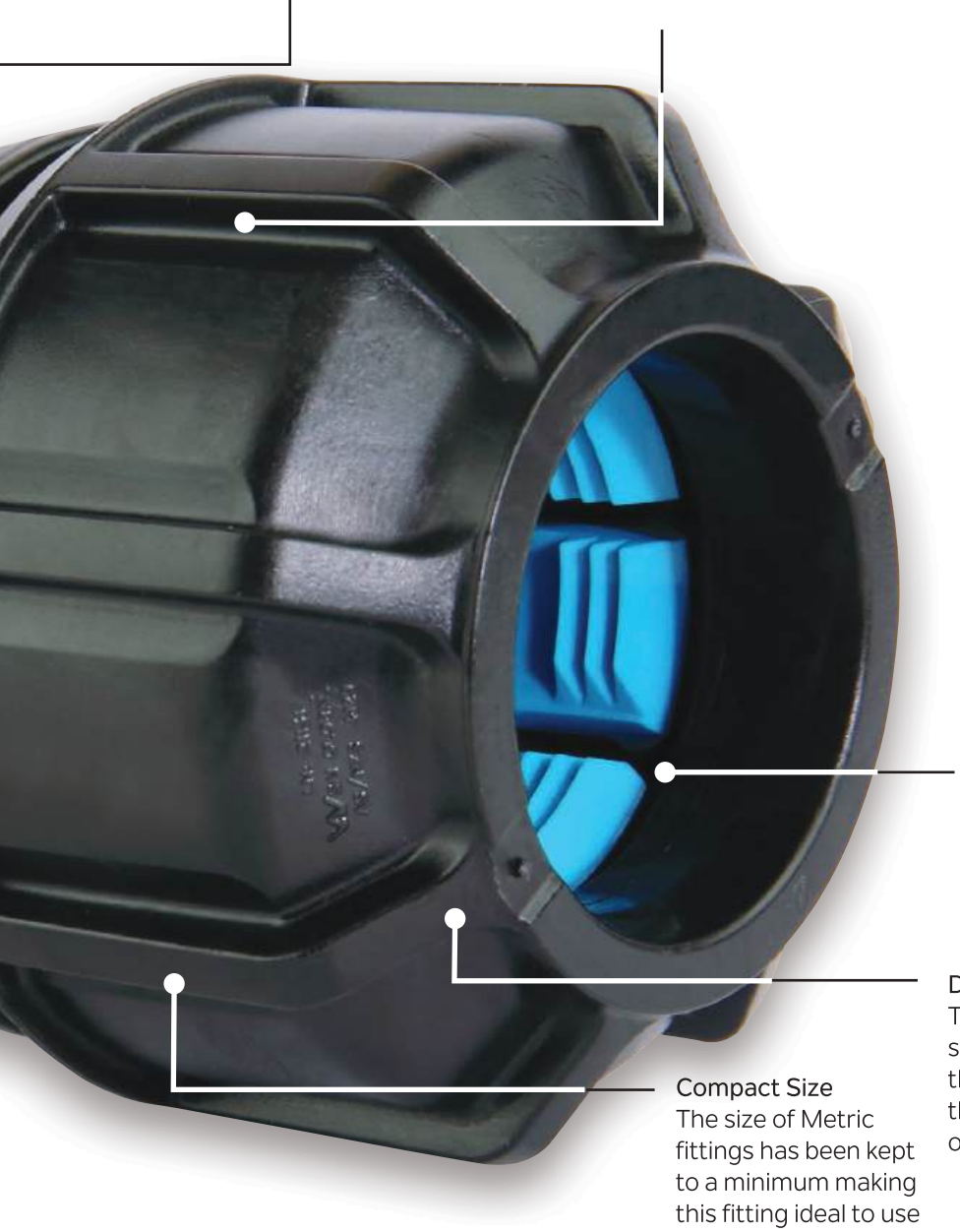



Choose from a wide selection of fittings (from 16mm to 63mm) including straight and reducing joiners and tees, elbows, end connectors, caps and blanking plugs.

### Slide and Tighten™

Incorporating all the benefits of Slide and Tighten™ technology with 100% positive feedback.

### Disassembly

The fitting has been designed so the grip ring is released as the nut is backed off, enabling the pipe to be simply pulled out of the fitting.

### Compact Size

The size of Metric fittings has been kept to a minimum making this fitting ideal to use in compact spaces.

### Minimal pipe twist

The fitting is designed to minimise pipe twist, reducing the risk of untightening joints.

# METRIC COMPRESSION FITTINGS

| RXP Code | Description | Philmac Code | Pack Qty | Pressure Rating @ 20°C |
|---|---|---|---|---|
| | Straight Coupling | | | |
| PHC20 | 20mm Metric Straight Coupling | 70712200 | 10 | 16 Bar |
| PHC25 | 25mm Metric Straight Coupling | 70713300 | 10 | 16 Bar |
| PHC32 | 32mm Metric Straight Coupling | 70714400 | 5 | 16 Bar |
| PHC40 | 40mm Metric Straight Coupling | 70715500 | 1 | 16 Bar |
| PHC50 | 50mm Metric Straight Coupling | 70716600 | 1 | 16 Bar |
| PHC63 | 63mm Metric Straight Coupling | 70717700 | 1 | 16 Bar |
| PHC75 | 75mm Metric Straight Coupling | 97618800 | 1 | 16 Bar |
| PHC90 | 90mm Metric Straight Coupling | 97619900 | 1 | 16 Bar |
| PHC110 | 110mm Metric Straight Coupling | 97610000 | 1 | 16 Bar |
| | Male Coupling | | | |
| PHMC20 | 20mm x ½" Metric Male Coupling | 70722100 | 10 | 16 Bar |
| PHMC2020 | 20mm x ¾" Metric Male Coupling | 70722200 | 10 | 16 Bar |
| PHMC25 | 25mm x ¾" Metric Male Coupling | 70723200 | 10 | 16 Bar |
| PHMC2525 | 25mm x 1" Metric Male Coupling | 70723300 | 10 | 16 Bar |
| PHMC32 | 32mm x 1" Metric Male Coupling | 70724300 | 5 | 16 Bar |
| PHMC3220 | 32mm x ¾" Metric Male Coupling | 70724200 | 5 | 16 Bar |
| PHMC3232 | 32mm x 1 ¼" Metric Male Coupling | 70724400 | 5 | 16 Bar |
| PHMC3240 | 32mm x 1 ½" Metric Male Coupling | 70724500 | 5 | 16 Bar |
| PHMC40 | 40mm x 1 ¼" Metric Male Coupling | 70725400 | 1 | 16 Bar |
| PHMC4025 | 40mm x 1" Metric Male Coupling | 70725300 | 1 | 16 Bar |
| PHMC4040 | 40mm x 1 ½" Metric Male Coupling | 70725500 | 1 | 16 Bar |
| PHMC4050 | 40mm x 2" Metric Male Coupling | 70725600 | 1 | 16 Bar |
| PHMC50 | 50mm x 1 ½" Metric Male Coupling | 70726500 | 1 | 16 Bar |
| PHMC5050 | 50mm x 2" Metric Male Coupling | 70726600 | 1 | 16 Bar |
| PHMC63 | 63mm x 2" Metric Male Coupling | 70727600 | 1 | 16 Bar |
| PHMC6340 | 63mm x 1 ½" Metric Male Coupling | 70727500 | 1 | 16 Bar |
| PHMC75 | 75mm x 2 ½" Metric Male Coupling | 97828700 | 1 | 16 Bar |
| PHMC7550 | 75mm x 2" Metric Male Coupling | 97628600 | 1 | 16 Bar |
| PHMC7575 | 75mm x 3" Metric Male Coupling | 97628800 | 1 | 16 Bar |
| PHMC90 | 90mm x 3" Metric Male Coupling | 97629800 | 1 | 16 Bar |
| PHMC9050 | 90mm x 2" Metric Male Coupling | 97829600 | 1 | 16 Bar |
| PHMC110 | 110mm x 4" Metric Male Coupling | 97620900 | 1 | 16 Bar |









# METRIC COMPRESSION FITTINGS

| RXP Code | Description | Philmac Code | Pack Qty | Pressure Rating @ 20°C |
|---|---|---|---|---|
| | **Female Coupling** | | | |
| PHFC20 | 20mm x ½" Metric Female Coupling | 70782100 | 10 | 16 Bar |
| PHFC2020 | 20mm x ¾" Metric Female Coupling | 70782200 | 10 | 16 Bar |
| PHFC25 | 25mm x ¾" Metric Female Coupling | 70783200 | 10 | 16 Bar |
| PHFC2525 | 25mm x 1" Metric Female Coupling | 70783300 | 10 | 16 Bar |
| PHFC32 | 32mm x 1" Metric Female Coupling | 70784300 | 5 | 16 Bar |
| PHFC3232 | 32mm x 1¼" Metric Female Coupling | 70784400 | 5 | 16 Bar |
| PHFC40 | 40mm x 1¼" Metric Female Coupling | 70785400 | 1 | 16 Bar |
| PHFC4040 | 40mm x 1½" Metric Female Coupling | 70785500 | 1 | 16 Bar |
| PHFC50 | 50mm x 1½" Metric Female Coupling | 70786500 | 1 | 16 Bar |
| PHFC5050 | 50mm x 2" Metric Female Coupling | 70786600 | 1 | 16 Bar |
| PHFC63 | 63mm x 2" Metric Female Coupling | 70787600 | 1 | 16 Bar |
| PHFC75 | 75mm x 2 ½" Metric Female Coupling | 97888700 | 1 | 16 Bar |
| PHFC7550 | 75mm x 2" Metric Female Coupling | 97688600 | 1 | 16 Bar |
| PHFC90 | 90mm x 3" Metric Female Coupling | 97689800 | 1 | 16 Bar |
| PHFC110 | 110mm x 4" Metric Female Coupling | 97680900 | 1 | 16 Bar |
| | **Reducing Coupling** | | | |
| PHRC2520 | 25mm x 20mm Metric Reducing Coupling | 70713200 | 10 | 16 Bar |
| PHRC3220 | 32mm x 20mm Metric Reducing Coupling | 70714200 | 5 | 16 Bar |
| PHRC3225 | 32mm x 25mm Metric Reducing Coupling | 70714300 | 5 | 16 Bar |
| PHRC4032 | 40mm x 32mm Metric Reducing Coupling | 70715400 | 1 | 16 Bar |
| PHRC5032 | 50mm x 32mm Metric Reducing Coupling | 70716400 | 1 | 16 Bar |
| PHRC5040 | 50mm x 40mm Metric Reducing Coupling | 70716500 | 1 | 16 Bar |
| PHRC6340 | 63mm x 40mm Metric Reducing Coupling | 70717500 | 1 | 16 Bar |
| PHRC6350 | 63mm x 50mm Metric Reducing Coupling | 70717600 | 1 | 16 Bar |
| PHRC7563 | 75mm x 63mm Metric Reducing Coupling | 97618700 | 1 | 16 Bar |
| PHRC9075 | 90mm x 75mm Metric Reducing Coupling | 97619800 | 1 | 16 Bar |
| PHRC11090 | 110mm x 90mm Metric Reducing Coupling | 97610900 | 1 | 16 Bar |
| | **Slip Coupling** | | | |
| PHSC25 | 25mm Slip Coupling | 70701330 | 1 | 16 Bar |
| PHSC32 | 32mm Slip Coupling | 70701440 | 1 | 16 Bar |
| PHSC40 | 40mm Slip Coupling | 70701550 | 1 | 16 Bar |
| PHSC50 | 50mm Slip Coupling | 70701660 | 1 | 16 Bar |
| PHSC63 | 63mm Slip Coupling | 70701770 | 1 | 16 Bar |











# METRIC COMPRESSION FITTINGS

| RXP Code | Description | Philmac Code | Pack Qty | Pressure Rating @ 20°C |
|---|---|---|---|---|
| | **Equal Tee** | | | |
| PHT20 | 20mm Metric Equal Tee | 70732200 | 10 | 16 Bar |
| PHT25 | 25mm Metric Equal Tee | 70733300 | 5 | 16 Bar |
| PHT32 | 32mm Metric Equal Tee | 70734400 | 5 | 16 Bar |
| PHT40 | 40mm Metric Equal Tee | 70735500 | 1 | 16 Bar |
| PHT50 | 50mm Metric Equal Tee | 70736600 | 1 | 16 Bar |
| PHT63 | 63mm Metric Equal Tee | 70737700 | 1 | 16 Bar |
| PHT75 | 75mm Metric Equal Tee | 97638800 | 1 | 16 Bar |
| PHT90 | 90mm Metric Equal Tee | 97639900 | 1 | 16 Bar |
| | **Female Tee** | | | |
| PHFT20 | 20mm x ½" x 20mm Metric Female Tee | 70742100 | 10 | 16 Bar |
| PHFT2020 | 20mm x ¾" x 20mm Metric Female Tee | 70742200 | 10 | 16 Bar |
| PHFT25 | 25mm x ¾" x 25mm Metric Female Tee | 70743200 | 5 | 16 Bar |
| PHFT2525 | 25mm x 1" x 25mm Metric Female Tee | 70743300 | 5 | 16 Bar |
| PHFT32 | 32mm x 1" x 32mm Metric Female Tee | 70744300 | 5 | 16 Bar |
| PHFT3232 | 32mm x 1¼" x 32mm Metric Female Tee | 70744400 | 5 | 16 Bar |
| PHFT40 | 40mm x 1¼" x 40mm Metric Female Tee | 70745400 | 1 | 16 Bar |
| PHFT50 | 50mm x 1½" x 50mm Metric Female Tee | 70746500 | 1 | 16 Bar |
| PHFT5050 | 50mm x 2" x 50mm Metric Female Tee | 70746600 | 1 | 16 Bar |
| PHFT63 | 63mm x 2" x 63mm Metric Female Tee | 70747600 | 1 | 16 Bar |
| PHFT75 | 75mm x 2 ½" x 75mm Metric Female Tee | 97648700 | 1 | 16 Bar |
| PHFT7550 | 75mm x 2" x 75mm Metric Female Tee | 97648600 | 1 | 16 Bar |
| PHFT90 | 90mm x 3" x 90mm Metric Female Tee | 97649800 | 1 | 16 Bar |
| | **Reducing Tee** | | | |
| PHRT2520 | 25 x 20 x 25mm Metric Reducing Tee | 70733200 | 5 | 16 Bar |
| PHRT3225 | 32 x 25 x 32mm Metric Reducing Tee | 70734300 | 5 | 16 Bar |
| PHRT4032 | 40 x 32 x 40mm Metric Reducing Tee | 70735400 | 1 | 16 Bar |
| PHRT5032 | 50 x 32 x 50mm Metric Reducing Tee | 70736400 | 1 | 16 Bar |
| PHRT5040 | 50 x 40 x 50mm Metric Reducing Tee | 70736500 | 1 | 16 Bar |
| PHRT6332 | 63 x 32 x 63mm Metric Reducing Tee | 70737400 | 1 | 16 Bar |
| PHRT6350 | 63 x 50 x 63mm Metric Reducing Tee | 70737600 | 1 | 16 Bar |
| | **90° Elbow** | | | |
| PHE20 | 20mm Metric 90° Elbow | 70752200 | 10 | 16 Bar |
| PHE25 | 25mm Metric 90° Elbow | 70753300 | 10 | 16 Bar |
| PHE32 | 32mm Metric 90° Elbow | 70754400 | 5 | 16 Bar |
| PHE40 | 40mm Metric 90° Elbow | 70755500 | 1 | 16 Bar |
| PHE50 | 50mm Metric 90° Elbow | 70756600 | 1 | 16 Bar |
| PHE63 | 63mm Metric 90° Elbow | 70757700 | 1 | 16 Bar |
| PHE75 | 75mm Metric 90° Elbow | 97658800 | 1 | 16 Bar |
| PHE90 | 90mm Metric 90° Elbow | 97659900 | 1 | 16 Bar |
| PHE110 | 110mm Metric 90° Elbow | 97650000 | 1 | 16 Bar |









# METRIC COMPRESSION FITTINGS

| RXP Code | Description | Philmac Code | Pack Qty | Pressure Rating @ 20°C |
|---|---|---|---|---|
| | 90° Male Elbow | | | |
| PHME20 | 20mm x ½" Metric 90° Male Elbow | 70772100 | 10 | 16 Bar |
| PHME25 | 25mm x ¾" Metric 90° Male Elbow | 70773200 | 10 | 16 Bar |
| PHME32 | 32mm x 1" Metric 90° Male Elbow | 70774300 | 5 | 16 Bar |
| PHME40 | 40mm x 1 ¼" Metric 90° Male Elbow | 70775400 | 1 | 16 Bar |
| PHME4040 | 40mm x 1 ½" Metric 90° Male Elbow | 70775500 | 1 | 16 Bar |
| PHME50 | 50mm x 1 ½" Metric 90° Male Elbow | 70776500 | 1 | 16 Bar |
| PHME63 | 63mm x 2" Metric 90° Male Elbow | 70777600 | 1 | 16 Bar |



| | | | | |
|---|---|---|---|---|
| | 90° Female Elbow | | | |
| PHFE20 | 20mm x ½" Metric 90° Female Elbow | 70762100 | 10 | 16 Bar |
| PHFE2020 | 20mm x ¾" Metric 90° Female Elbow | 70762200 | 10 | 16 Bar |
| PHFE25 | 25mm x ¾" Metric 90° Female Elbow | 70763200 | 10 | 16 Bar |
| PHFE2525 | 25mm x 1" Metric 90° Female Elbow | 70763300 | 10 | 16 Bar |
| PHFE32 | 32mm x 1" Metric 90° Female Elbow | 70764300 | 5 | 16 Bar |
| PHFE3220 | 32mm x ¾" Metric 90° Female Elbow | 70764200 | 5 | 16 Bar |
| PHFE40 | 40mm x 1 ¼" Metric 90° Female Elbow | 70765400 | 1 | 16 Bar |
| PHFE4040 | 40mm x 1 ½" Metric 90° Female Elbow | 70765500 | 1 | 16 Bar |
| PHFE50 | 50mm x 1 ½" Metric 90° Female Elbow | 70766500 | 1 | 16 Bar |
| PHFE5050 | 50mm x 2" Metric 90° Female Elbow | 70766600 | 1 | 16 Bar |
| PHFE63 | 63mm x 2" Metric 90° Female Elbow | 70767600 | 1 | 16 Bar |



| | | | | |
|---|---|---|---|---|
| PHFE75 | 75mm x 2 ½" Metric 90° Female Elbow | 97868700 | 1 | 16 Bar |
| PHFE7550 | 75mm x 2" Metric 90° Female Elbow | 97668600 | 1 | 16 Bar |
| PHFE9075 | 90mm x 3" Metric 90° Female Elbow | 97669800 | 1 | 16 Bar |



| | | | | |
|---|---|---|---|---|
| | End Plug | | | |
| PHEP32 | 32mm End Plug | 70704900 | 5 | 16 Bar |
| PHEP40 | 40mm End Plug | 70705900 | 1 | 16 Bar |
| PHEP50 | 50mm End Plug | 70706900 | 1 | 16 Bar |
| PHEP63 | 63mm End Plug | 70707900 | 1 | 16 Bar |



# METRIC COMPRESSION FITTINGS

## Metric Tapping Saddles

| RXP Code | Description | Pack Qty | Pressure Rating @ 20°C |
|---|---|---|---|
| | 2 Bolt Tapping Saddle | | |
| PTS2515 | 25 x 15mm (25mm x ½") 2 Bolt Saddle | 1 | 16 Bar |
| PTS2520 | 25 x 20mm (25mm x ¾") 2 Bolt Saddle | 1 | 16 Bar |
| PTS3215 | 32 x 15mm (32mm x ½"") 2 Bolt Saddle | 1 | 16 Bar |
| PTS3220 | 32 x 20mm (32mm x ¾" 2 Bolt Saddle | 1 | 16 Bar |
| PTS4015 | 40 x 15mm (40mm x ½") 2 Bolt Saddle | 1 | 16 Bar |
| PTS4020 | 40 x 20mm (40mm x ¾") 2 Bolt Saddle | 1 | 16 Bar |
| PTS4025 | 40 x 25mm (40mm x 1") 2 Bolt Saddle | 1 | 16 Bar |
| PTS5015 | 50 x 15mm (50mm x ½") 2 Bolt Saddle | 1 | 16 Bar |
| PTS5020 | 50 x 20mm (50mm x ¾") 2 Bolt Saddle | 1 | 16 Bar |
| PTS5025 | 50 x 25mm (50mm x 1") 2 Bolt Saddle | 1 | 16 Bar |
| PTS6320 | 63 x 20mm (63mm x ¾") 2 Bolt Saddle | 1 | 16 Bar |
| PTS6325 | 63 x 25mm (63mm x 1") 2 Bolt Saddle | 1 | 16 Bar |
| PTS7520 | 75 x 20mm (75mm x ¾") 2 Bolt Saddle | 1 | 10 Bar |
| PTS7525 | 75 x 25mm (75mm x 1") 2 Bolt Saddle | 1 | 10 Bar |



| | 4 Bolt Tapping Saddle | | |
|---|---|---|---|
| PTS6320-4 | 63 x 20mm (60mm x ¾") 4 Bolt Saddle | 1 | 16 Bar |
| PTS6325-4 | 63 x 25mm (63mm x 1") 4 Bolt Saddle | 1 | 16 Bar |
| PTS6340-4 | 63 x 40mm (63mm x 1½") 4 Bolt Saddle | 1 | 16 Bar |
| PTS7520-4 | 75 x 20mm (75mm x ¾") 4 Bolt Saddle | 1 | 10 Bar |
| PTS7525-4 | 75 x 25mm (75mm x 1") 4 Bolt Saddle | 1 | 10 Bar |
| PTS7540-4 | 75 x 40mm (75mm x 1½") 4 Bolt Saddle | 1 | 10 Bar |
| PTS7550-4 | 75 x 50mm (75mm x 2") 4 Bolt Saddle | 1 | 10 Bar |
| PTS9020-4 | 90 x 20mm (90mm x ¾") 4 Bolt Saddle | 1 | 10 Bar |
| PTS9025-4 | 90 x 25mm (90mm x 1") 4 Bolt Saddle | 1 | 10 Bar |
| PTS9040-4 | 90 x 40mm (90mm x 1½") 4 Bolt Saddle | 1 | 10 Bar |
| PTS9050-4 | 90 x 50mm (90mm x 2") 4 Bolt Saddle | 1 | 10 Bar |
| PTS11025-4 | 110 x 25mm (110mm x 1") 4 Bolt Saddle | 1 | 10 Bar |
| PTS11040-4 | 110 x 40mm (110mm x 1½"") 4 Bolt Saddle | 1 | 10 Bar |
| PTS11050-4 | 110 x 50mm (110mm x 2") 4 Bolt Saddle | 1 | 10 Bar |



| | 2 Bolt Spigot Saddle | | |
|---|---|---|---|
| PTS6325S | 63 x 25mm (63mm x 1") 2 Bolt Spigot Saddle | 1 | 16 Bar |

# LOW DENSITY
## FITTINGS



- 15mm to 50mm - 5 - 9.7 Bar (500 - 970 kPa).
- Resistant to pull-out of assembled joint.
- Resistant to leaking when bent.
- Hexagonal surfaces for firm mechanical grip.
- No sharp external edges for a comfortable hand grip.
- High grade engineering material developed for enhanced impact resistance, to ensure strong barb and hard teeth.
- Made from top quality glass reinforced nylon.

Philmac

The connection you can trust.

## INSTALLATION




Cut pipe ends square with pipe cutters, knife or saw. Debur and chamfer ends if required. Turn nut clockwise until it stops.

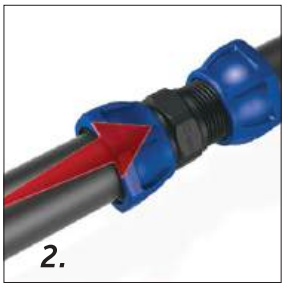


Push pipe over nozzle and barbs until it stops. This will conceal the pipe end by the nut.




Turn the nut anti-clockwise by hand until it grips the outside of the pipe. The nut teeth will cut into the pipe.




Lock the nut tight onto the pipe using a pipe grip, spanner or wrench. This will compress the pipe over the fitting barbs.



## Naming Convention




'Primary' (1st number - LDMT**15**20) refers to the nominal bore of polyethylene pipe (mm) in all cases.

'Secondary' (2nd number - LDMT15**20**) varies by product type and refers to either the pipe nominal bore (mm) or BSP thread size (").

# LOW DENSITY FITTINGS

| RXP Code | Description | Pack Quantity |
|---|---|---|
| | **Straight Coupling** | |
| LDSC15 | 15mm Straight Coupling | 10 |
| LDSC20 | 20mm Straight Coupling | 10 |
| LDSC25 | 25mm Straight Coupling | 10 |
| LDSC32 | 32mm Straight Coupling | 10 |
| LDSC40 | 40mm Straight Coupling | 5 |
| LDSC45 | 45mm Straight Coupling | 5 |
| LDSC50 | 50mm Straight Coupling | 2 |



| | **Male Coupling** | |
|---|---|---|
| LDMC15 | 15mm x ½" BSP Male Coupling | 10 |
| LDMC20 | 20mm x ¾" BSP Male Coupling | 10 |
| LDMC25 | 25mm x 1" BSP Male Coupling | 10 |
| LDMC32 | 32mm x 1¼" BSP Male Coupling | 10 |
| LDMC40 | 40mm x 1½" BSP Male Coupling | 5 |
| LDMC4550 | 45mm x 2" BSP Male Coupling | 5 |
| LDMC50 | 50mm x 2" BSP Male Coupling | 5 |



| | **Female Coupling** | |
|---|---|---|
| LDFC15 | 15mm x ½" BSP Female Coupling | 10 |
| LDFC20 | 20mm x ¾" BSP Female Coupling | 10 |
| LDFC25 | 25mm x 1" BSP Female Coupling | 10 |
| LDFC32 | 32mm x 1¼" BSP Female Coupling | 10 |
| LDFC40 | 40mm x 1½" BSP Female Coupling | 5 |
| LDFC50 | 50mm x 2" BSP Female Coupling | 5 |



| | **Reducing Coupling** | |
|---|---|---|
| LDRC2015 | 20mm x 15mm Reducing Coupling | 10 |
| LDRC2515 | 25mm x 15mm Reducing Coupling | 10 |
| LDRC2520 | 25mm x 20mm Reducing Coupling | 10 |
| LDRC3220 | 32mm x 20mm Reducing Coupling | 10 |
| LDRC3225 | 32mm x 25mm Reducing Coupling | 10 |
| LDRC4025 | 40mm x 25mm Reducing Coupling | 10 |
| LDRC4032 | 40mm x 32mm Reducing Coupling | 5 |
| LDRC4540 | 45mm x 40mm Reducing Coupling | 5 |
| LDRC5040 | 50mm x 40mm Reducing Coupling | 2 |



| | **Reducing Male Coupling** | |
|---|---|---|
| LDRMC1520 | 15mm x ¾" BSP Reducing Male Coupling | 10 |
| LDRMC1525 | 15mm x 1" BSP Reducing Male Coupling | 10 |
| LDRMC2015 | 20mm x ½" BSP Reducing Male Coupling | 10 |
| LDRMC2025 | 20mm x 1" BSP Reducing Male Coupling | 10 |
| LDRMC2032 | 20mm x 1¼" BSP Reducing Male Coupling | 10 |



# LOW DENSITY FITTINGS

| RXP Code | Description | Pack Quantity |
|---|---|---|
| | **Reducing Male Coupling** | |
| LDRMC2515 | 25mm x ½" BSP Reducing Male Coupling | 10 |
| LDRMC2520 | 25mm x ¾" BSP Reducing Male Coupling | 10 |
| LDRMC2532 | 25mm x 1¼" BSP Reducing Male Coupling | 10 |
| LDRMC3220 | 32mm x ¾" BSP Reducing Male Coupling | 10 |
| LDRMC3225 | 32mm x 1" BSP Reducing Male Coupling | 10 |



| | **Reducing Female Coupling** | |
|---|---|---|
| LDRFC1520 | 15mm x ¾" BSP Reducing Female Coupling | 10 |
| LDRFC2015 | 20mm x ½" BSP Reducing Female Coupling | 10 |
| LDRFC2025 | 20mm x 1" BSP Reducing Female Coupling | 10 |
| LDRFC2520 | 25mm x ¾" BSP Reducing Female Coupling | 10 |
| LDRFC2532 | 25mm x 1¼" BSP Reducing Female Coupling | 10 |
| LDRFC3225 | 32mm x 1" BSP Reducing Female Coupling | 10 |
| LDRFC3240 | 32mm x 1½" BSP Reducing Female Coupling | 5 |
| LDRFC4032 | 40mm x 1¼" BSP Reducing Female Coupling | 5 |
| LDRFC4050 | 40mm x 2" BSP Reducing Female Coupling | 5 |
| LDRFC5040 | 50mm x 1½" BSP Reducing Female Coupling | 5 |



| | **Tee** | |
|---|---|---|
| LDT15 | 15mm Tee | 10 |
| LDT20 | 20mm Tee | 10 |
| LDT25 | 25mm Tee | 10 |
| LDT32 | 32mm Tee | 10 |
| LDT40 | 40mm Tee | 5 |
| LDT50 | 50mm Tee | 2 |



| | **Male Tee** | |
|---|---|---|
| LDMT1520 | 15mm x ¾" BSP Male Tee | 10 |
| LDMT2020 | 20mm x ¾" BSP Male Tee | 10 |



| | **Female Tee** | |
|---|---|---|
| LDFT15 | 15mm x ½" BSP Female Tee | 10 |
| LDFT20 | 20mm x ¾" BSP Female Tee | 10 |
| LDFT25 | 25mm x 1" BSP Female Tee | 10 |
| LDFT32 | 32mm x 1¼" BSP Female Tee | 5 |
| LDFT40 | 40mm x 1½" BSP Female Tee | 5 |
| LDFT50 | 50mm x 2" BSP Female Tee | 2 |



## Naming Convention

**LDMT1520**




'Primary' (1st number - LDMT**15**20) refers to the nominal bore of polyethylene pipe (mm) in all cases.

'Secondary' (2nd number - LDMT15**20**) varies by product type and refers to either the pipe nominal bore (mm) or BSP thread size (").

# LOW DENSITY FITTINGS

| RXP Code | Description | Pack Quantity |
|---|---|---|
| | **Reducing Tee** | |
| LDRT1520 | 15mm x 20mm Reducing Tee | 10 |
| LDRT2015 | 20mm x 15mm Reducing Tee | 10 |
| LDRT2025 | 20mm x 25mm Reducing Tee | 10 |
| LDRT2515 | 25mm x 15mm Reducing Tee | 10 |
| LDRT2520 | 25mm x 20mm Reducing Tee | 10 |
| LDRT3220 | 32mm x 20mm Reducing Tee | 5 |
| LDRT3225 | 32mm x 25mm Reducing Tee | 5 |
| LDRT4025 | 40mm x 25mm Reducing Tee | 5 |
| LDRT4032 | 40mm x 32mm Reducing Tee | 2 |
| LDRT5032 | 50mm x 32mm Reducing Tee | 2 |
| LDRT5040 | 50mm x 40mm Reducing Tee | 2 |



| | | |
|---|---|---|
| | **90° Bend** | |
| LDB15 | 15mm 90° Bend | 10 |
| LDB20 | 20mm 90° Bend | 10 |
| LDB25 | 25mm 90° Bend | 10 |
| LDB32 | 32mm 90° Bend | 10 |
| LDB40 | 40mm 90° Bend | 5 |
| LDB50 | 50mm 90° Bend | 5 |



| | | |
|---|---|---|
| | **Male 90° Bend** | |
| LDMB15 | 15mm x ½" BSP Male 90° Bend | 10 |
| LDMB20 | 20mm x ¾" BSP Male 90° Bend | 10 |
| LDMB25 | 25mm x 1" BSP Male 90° Bend | 10 |
| LDMB32 | 32mm x 1 ¼" BSP Male 90° Bend | 10 |
| LDMB40 | 40mm x 1 ½" BSP Male 90° Bend | 5 |
| LDMB50 | 50mm x 2" BSP Male 90° Bend | 5 |



| | | |
|---|---|---|
| | **Long Male 90° Bend** | |
| LDLMB15 | 15mm x ½" BSP Long Male 90° Bend | 10 |
| LDLMB20 | 20mm x ¾" BSP Long Male 90° Bend | 10 |
| LDLMB25 | 25mm x 1" BSP Long Male 90° Bend | 10 |



| | | |
|---|---|---|
| | **Reducing Male 90° Bend** | |
| LDRMB1520 | 15mm x ¾" BSP Reducing Male 90° Bend | 10 |
| LDRMB2015 | 20mm x ½" BSP Reducing Male 90° Bend | 10 |
| LDRMB2025 | 20mm x 1" BSP Reducing Male 90° Bend | 5 |
| LDRMB2520 | 25mm x ¾" BSP Reducing Male 90° Bend | 5 |



| | | |
|---|---|---|
| | **Long Reducing Male 90° Bend** | |
| LDLRMB1520 | 15mm x ¾" BSP Long Reducing Male 90° Bend | 10 |
| LDLRMB2015 | 20mm x ½" BSP Long Reducing Male 90° Bend | 10 |
| LDLRMB2025 | 20mm x 1" BSP Long Reducing Male 90° Bend | 5 |
| LDLRMB2520 | 25mm x ¾" BSP Long Reducing Male 90° Bend | 5 |



# LOW DENSITY FITTINGS

| RXP Code | Description | Pack Quantity |
|---|---|---|
| | **Female 90° Bend** | |
| LDFB15 | 15mm x ½" BSP Female 90° Bend | 10 |
| LDFB20 | 20mm x ¾" BSP Female 90° Bend | 10 |
| LDFB25 | 25mm x 1" BSP Female 90° Bend | 10 |
| LDFB32 | 32mm x 1¼" BSP Female 90° Bend | 5 |
| LDFB40 | 40mm x 1½" BSP Female 90° Bend | 5 |
| LDFB50 | 50mm x 2" BSP Female 90° Bend | 5 |



| | | |
|---|---|---|
| | **Reducing Female 90° Bend** | |
| LDRFB1520 | 15mm x ¾" BSP Reducing Female 90° Bend | 10 |
| LDRFB2015 | 20mm x ½" BSP Reducing Female 90° Bend | 10 |
| LDRFB2025 | 20mm x 1" BSP Reducing Female 90° Bend | 10 |
| LDRFB2520 | 25mm x ¾" BSP Reducing Female 90° Bend | 10 |
| LDRFB2532 | 25mm x 1¼" BSP Reducing Female 90° Bend | 5 |
| LDRFB3225 | 32mm x 1" BSP Reducing Female 90° Bend | 5 |
| LDRFB3240 | 32mm x 1½" BSP Reducing Female 90° Bend | 5 |
| LDRFB4032 | 40mm x 1¼" BSP Reducing Female 90° Bend | 5 |
| LDRFB4050 | 40mm x 2" BSP Reducing Female 90° Bend | 2 |
| LDRFB5040 | 50mm x 1¼" BSP Reducing Female 90° Bend | 2 |



| | | |
|---|---|---|
| | **Bracket Elbow** | |
| LDBE15 | 15mm x ½" BSP Bracket Elbow | 10 |
| LDBE20 | 20mm x ¾" BSP Bracket Elbow | 10 |



| | | |
|---|---|---|
| | **Reducing Bracket Elbow** | |
| LDBE1520 | 15mm x ¾" BSP Reducing Bracket Elbow | 10 |
| LDBE2015 | 20mm x ½" BSP Reducing Bracket Elbow | 10 |





## Naming Convention

**LDMT1520**




'Primary' (1st number - LDMT**15**20) refers to the nominal bore of polyethylene pipe (mm) in all cases.

'Secondary' (2nd number - LDMT15**20**) varies by product type and refers to either the pipe nominal bore (mm) or BSP thread size (").

# TROUGH VALVES AND BALLFLOATS

## Acetal Float Valves

| RXP Code | Description | Philmac Code |
|---|---|---|
| | **EasyPhil - Compact Float Valve** | |
| PH.EASY.FV15L | Easy 15mm Acetal Float Valve | 90300200 |
| PH.EASY.FV15LMA | Easy 15mm Acetal Float Valve Medium Arm | 90300300 |
| PH.EASY.FV15LSA | Easy 15mm Acetal Float Valve Short Arm | 90300400 |
| PH.EASY.FV20L | Easy 20mm Acetal Float Valve | 90300220 |
| PH.EASY.FV20LMA | Easy 20mm Acetal Float Valve Medium Arm | 90300320 |
| PH.EASY.FV20LSA | Easy 20mm Acetal Float Valve Short | 90300420 |



| | | |
|---|---|---|
| | **VersaPhil - Full Flow Acetal Float Valve** | |
| PH.VERSA.FV2520 | Versa 20/25mm Acetal FV c/w Adaptor | 91470320 |
| PH.VERSA.FV2520SA | Versa 20/25mm Acetal FV Short Arm c/w Adaptor | 91470321 |
| PH.VERSA.FV20L | Versa 20mm Acetal FV Long Thread | 91470220 |
| PH.VERSA.FV20LSA | Versa 20mm Acetal FV Long Thread Short Arm | 91470221 |
| PH.VERSA.FV25L | Versa 25mm Acetal FV Long Thread | 91470330 |
| PH.VERSA.FV25LSA | Versa 25mm Acetal FV Long Thread Short Arm | 91470331 |





| | | |
|---|---|---|
| | **VersaRX - Full Flow Acetal Trough Valve** | |
| PH.VERSARX.FV25LSA | VersaRX 25mm Acetal FV Long Thread Short Arm | 91470311 |



| | | |
|---|---|---|
| | **Acetal Reservoir Valve - Dual Float** | |
| PH.TANK.FV32SL | Tank 32mm RESV Single Arm | 91470400 |
| PH.TANK.FV40SL | Tank 40mm RESV Single Arm | 91470500 |
| PH.TANK.FV50SL | Tank 50mm RESV Single Arm | 91470600 |
| | | |
| PH.TANK.FV32DL | Tank 32mm RESV Dual Arm | 91470410 |
| PH.TANK.FV40DL | Tank 40mm RESV Dual Arm | 91470510 |
| PH.TANK.FV50DL | Tank 50mm RESV Dual Arm | 91470610 |





| | | |
|---|---|---|
| | **OptiPhil - Diaphragm Valve** | |
| PH.OPTI.FV25.AW | 20/25/32 Philmac Above Water Diaphragm Valve | |
| PH.OPTI.FV25.BW | 20/25/32 Philmac Below Water Diaphragm Valve | |



NB: Long Threads are BSP Parallel

# TROUGH VALVES AND BALLFLOATS

## Brass Trough Valves

| RXP Code | Description | Philmac Code |
|---|---|---|
| | **UltraPhil - Brass Float Valve** | |
| PH.ULTRA. FV10SPTSA | Ultra 10mm Brass Short Arm Short PT Float Valve | 90300500 |
| PH.ULTRA. FV15SPTMA | Ultra 15mm Brass Med Arm Short PT Float Valve | 90303100 |
| PH.ULTRA.FV15L | Ultra 15mm Brass Long Thread Float Valve | 90301300 |
| PH.ULTRA. FV15LMA | Ultra 15mm Brass Long Thread Med Arm Float Valve | 90301500 |
| PH.ULTRA. FV15MA | Ultra 15mm Brass Medium Arm Float Valve | 90300700 |
| PH.ULTRA.FV20 | Ultra 20mm Brass Float Valve | 90304400 |
| PH.ULTRA.FV25 | Ultra 25mm Brass Float Valve | 90304600 |
| PH.ULTRA.FV32 | Ultra 32mm Brass Float Valve* 3/8" Arm Thread | 90304800 |
| PH.ULTRA.FV40 | Ultra 40mm Brass Float Valve* 3/8" Arm Thread | 90304900 |
| PH.ULTRA.FV50 | Ultra 50mm Brass Float Valve* 1/2" Arm Thread | 90305000 |


Tapered Thread


Parallel Thread

| | | |
|---|---|---|
| | **MegaPhil - Brass Hi-Flo - 1/2" BSW Arm Thread** | |
| PH.MEGA.FV25 | Mega 25mm Brass Float Valve Hi-Flo | 90322300 |
| PH.MEGA.FV25SA | Mega 25mm Brass Short Arm Float Valve Hi-Flo | 90322310 |
| PH.MEGA.FV32 | Mega 32mm Brass Float Valve Hi-Flo | 90322400 |
| PH.MEGA.FV32SA | Mega 32mm Brass Short Arm Float Valve Hi-Flo | 90322410 |
| PH.MEGA.FV40 | Mega 40mm Brass Float Valve Hi-Flo LP/VLP | 90322520* |
| PH.MEGA.FV40SA | Mega 40mm Brass Short ArmFloat Valve Hi-Flo LP/VLP | 90322530* |
| PH.MEGA.FV50 | Mega 50mm Brass Float Valve Hi-Flo LP/VLP | 90322620* |
| PH.MEGA.FV50SA | Mega 50mm Brass Short ArmFloat Valve Hi-Flo LP/VLP | 90322630* |



* Requires TURBO 9" Ball Float

| | |
|---|---|
| | **Brass High Pressure / Brass Low Pressure Trough Valve** |
| STV15SS | 15mm Brass High Pressure Valve - Stainless Seat |
| STV20SS | 20mm Brass High Pressure Valve - Stainless Seat |
| STV15SSL | 15mm Brass Low Pressure Valve - Stainless Seat |
| STV20SSL | 20mm Brass Low Pressure Valve - Stainless Seat |



| | |
|---|---|
| | **Brass Full Flow Trough Valve** |
| BTV69.20 | 20mm Full Flow Brass Trough Valve |
| BTV69.25 | 25mm Full Flow Brass Trough Valve |



| | |
|---|---|
| | **Brass Hi/Lo Pressure Valve** |
| BTV220.15SS | 15mm Brass Hi/Lo Pressure Valve S/S Seat |
| BTV220.20SS | 20mm Brass Hi/Lo Pressure Valve S/S Seat |



# TROUGH VALVES AND BALLFLOATS

## Spare Parts

| RXP Code | Description |
|---|---|
| | Spare Parts for STV, BTV69 and BTV220 series |
| TVP.SSL | Long Lever to suit High and Low Trough Valves (STV Series) |
| TVP.L69 | Lever to suit Fullflow (BTV Series) |
| TVP.ECW | Fullflow Endcap Washer (BTV69 Series) |
| TVP.POR | Fullflow Plunger with O ring (BTV69 series) |
| TVP.W220 | Seat Washer for High and Low Pressure Valves (STV Series) |
| TVP.PB | Brass Plunger for High and Low Pressure (STV Series) |

| | |
|---|---|
| | Spare Parts for RXPTV (while stocks last) |
| RXPTV.ECW | Trough Valve Rubber Washer for End Cap |
| RXPTV.RWL20 | 20mm Rubber Washer for Long Thread 20mm PTV |
| RXPTV.RWL25 | 25mm Rubber Washer for Long Thread 25mm PTV |
| RXPTV.SP | Split Pin T304 4x16mm |
| RXPTV.P | Trough Valve Plunger and O ring |
| RXPTV.EC | Trough Valve End Cap with Washer |

# TROUGH VALVES AND BALLFLOATS

## Ball Floats and Nipples

| RXP Code | Description | Philmac Code |
|---|---|---|
| | Ball Floats and Nipple | |
| PH.FV.BF80 | Float Plastic 80mm Black | 90489300 |
| PH.FV.BF100 | Float Plastic 100mm Black | 90489400 |
| PH.FV.BF140 | Float Plastic 140mm Black | 90489500 |
| PH.FV.BF150 | Float Plastic 150mm Black | 90489600 |
| PH.FV.BF200 | Float Plastic 200mm x (3/8" Thread) Black | 90489800 |
| PH.FV.BF200ORG | Float Plastic 200mm x (1/2" Thread) Orange | 90489820 |
| PH.FV.BF225ORG | Float Plastic 225mm x (1/2" Thread) Orange | 90489920 |
| PH.FV.BF240 | Float Plastic 240mm x (1/2" Thread) TURBO | 90489020 |
| RXBF115 | 115mm Black Ball Float | |
| RXBF115/0 | 115mm Orange Ball Float | |
| RXBF150 | 150mm Black Ball Float | |
| RXBF150/0 | 150mm Orange Ball Float | |
| TV.CN | Cord and Nipple | |



All threads 5/16" BSW unless noted.

### STV 15 - Brass Seat

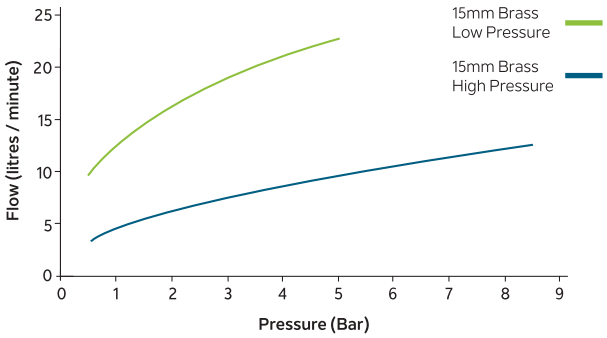


### STV 15 & 20mm - Stainless Steel Seat

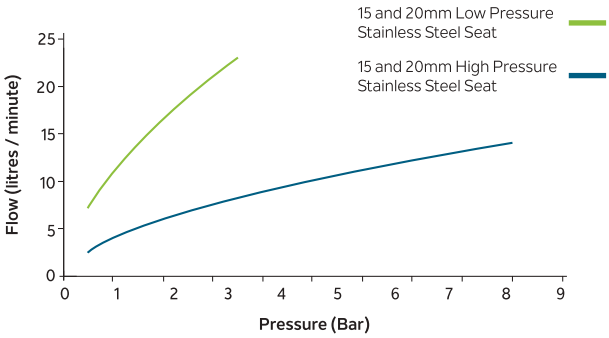


### BTV69 - 20 and 25mm

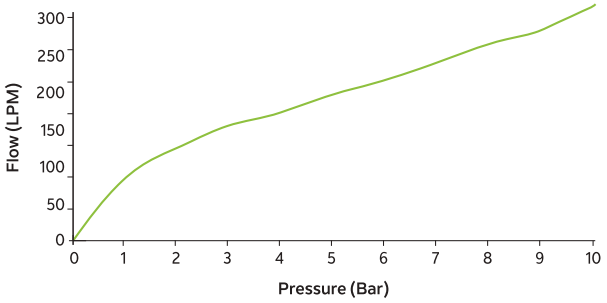


### BTV69 - 20 and 25mm

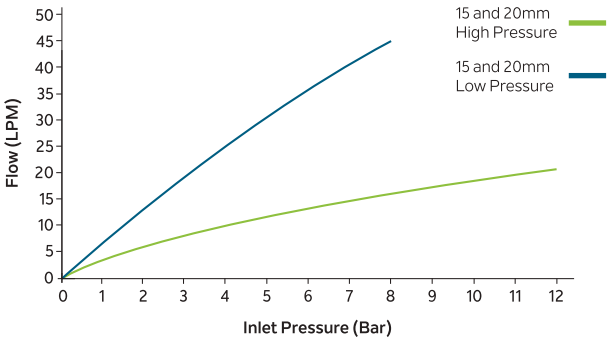

# TROUGH VALVES AND BALLFLOATS

## Technical Data

### UltraPHIL Brass Float Valve

| Product Code | Inlet Size | Thread Type[1] | Arm Length | Arm Thread | Recommended Float Size[2] | |
|---|---|---|---|---|---|---|
| | | | | | AS1910[3] | Agricultural[4] |
| PH.ULTRA.FV10SPTSA | ⅜" BSP | Short parallel (15 mm) | 125 mm | 5/16" BSW | 4" (100) | 4" (100) |
| PH.ULTRA.FV15MA | ½" BSP | Tapered | 200 mm | 5/16" BSW | 4" (100) | 4" (100) |
| PH.ULTRA.FV15L | ½" BSP | Long parallel (38 mm) | 250 mm | 5/16" BSW | 4" (100) | 4" (100) |
| PH.ULTRA.FV15LMA | ½" BSP | Long parallel (38 mm) | 200 mm | 5/16" BSW | 4" (100) | 4" (100) |
| PH.ULTRA.FV15LMA.ADAPT | ½" BSP | Long parallel (38 mm) | 200 mm | 5/16" BSW | 4" (100) | 4" (100) |
| PH.ULTRA.FV15SPTMA | ½" BSP | Short parallel (25 mm) | 200 mm | 5/16" BSW | 4" (100) | 4" (100) |
| PH.ULTRA.FV20 | ¾" BSP | Tapered | 250 mm | 5/16" BSW | 6" (150) | 6" (150) |
| PH.ULTRA.FV25 | 1" BSP | Tapered | 355 mm | 5/16" BSW | 6" (150) | 6" (150) |
| PH.ULTRA.FV32 | 1-¼ " BSP | Tapered | 355 mm | 3/8" BSW | 8" (200) | 8" (200) |
| PH.ULTRA.FV40 | 1-½" BSP | Tapered | 425 mm | 3/8" BSW | 8" (200) | 8" (200) |
| PH.ULTRA.FV50 | 2" | Tapered | 455 mm | 1/2" BSW | 10" (255) CU | 9" (225) |

### VersaPHIL Acetal Float Valves

| Product Code | Inlet Size | Thread Type[1] | Arm Length | Arm Thread | Recommended Float Size[2] |
|---|---|---|---|---|---|
| PH.VERSA.FV2520 | 1" & ¾" BSP | Tapered & Tapered | 300 mm | 5/16" BSW | 6" (150) |
| PH.VERSA.FV2520SA | 1" & ¾" BSP | Tapered & Tapered | 165 mm | 5/16" BSW | 6" (150) |
| PH.VERSA.FV20L | 1" & ¾" BSP | Tapered & Long | 300 mm | 5/16" BSW | 6" (150) |
| PH.VERSA.FV20LSA | 1" & ¾" BSP | Tapered & Long | 165 mm | 5/16" BSW | 6" (150) |
| PH.VERSA.FV25L | 1"& 1"BSP | Tapered & Long | 300 mm | 5/16" BSW | 6" (150) |
| PH.VERSA.FV25LSA | 1"& 1"BSP | Tapered & Long | 165 mm | 5/16" BSW | 6" (150) |

### VersaRX Acetal Float Valves

| Product Code | Inlet Size | Thread Type[1] | Arm Length | Arm Thread | Recommended Float Size[2] |
|---|---|---|---|---|---|
| PH.VERSARX.FV25LSA | 1" BSP | Long parallel | 170 mm | 5/16" BSW | 6" (150) |

### EasyPHIL Acetal Float Valves

| Product Code | Inlet Size | Thread Type[1] | Arm Length | Arm Thread | Recommended Float Size[2] | |
|---|---|---|---|---|---|---|
| | | | | | AS1910[3] | Agricultural[4] |
| PH.EASY.FV15L | ½" BSP | Long parallel | 250 mm | 5/16" BSW | 4" (100) | 4" (100) |
| PH.EASY.FV15LMA | ½" BSP | Long parallel | 200 mm | 5/16" BSW | 4" (100) | 4" (100) |
| PH.EASY.FV15LSA | ½" BSP | Long parallel | 125 mm | 5/16" BSW | - | 4" (100) |
| PH.EASY.FV20L | ¾" BSP | Long parallel | 250 mm | 5/16" BSW | 4" (100) | 4" (100) |
| PH.EASY.FV20LMA | ¾" BSP | Long parallel | 200 mm | 5/16" BSW | 4" (100) | 4" (100) |
| PH.EASY.FV20LSA | ¾" BSP | Long parallel | 125 mm | 5/16" BSW | - | 4" (100) |

1. All parallel threads have a body back nut fitted except the PH.ULTRA.FV10SPTSA (3/8").
2. Recommended floats are plastic unless designated otherwise. CU = copper.
3. To comply with AS1910 valves the recommended float size provides a shut-off pressure of 1400 kPa
4. For agricultural purposes the recommended float size achieves at least a shut-off pressure of 1250 kPa

# IRRIGATION FITTINGS AND SPRINKLERS

- Sharp-edged barbs create leak-proof seal.
- Strong, superior quality.
- UV stabilised materials for long life.
- Easy to install, reducing time and cost on installation.
- Used in conjunction with low pressure poly pipe.
- Suitable for agricultural, horticultural, vineyard and landscape applications.

| RXP Code | Description | Pack Quantity |
|---|---|---|
| | **Connector** | |
| RXLC4.4 | 4x4 Lateral Connector | 100 |
| RXLC4.7 | 4x7 Lateral Connector | 100 |
| RXLC7.7 | 7x7 Lateral Connector | 100 |
| | **Barbed Joiner** | |
| RXLJ13 | 13mm Barbed Lateral Joiner | 20 |
| RXLJ16 | 16mm Barbed Lateral Joiner | 20 |
| RXLJ19 | 19mm Barbed Lateral Joiner | 20 |
| RXLJ25 | 25mm Barbed Lateral Joiner | 20 |
| | **Take-Off Connector and Grommet** | |
| RXLTOC13 | 13mm Take-Off Connector and Grommet | 10, 20, 50, 100 |
| RXLTOC16 | 16mm Take-Off Connector and Grommet | 10, 20, 50, 100 |
| RXLTOC19 | 19mm Take-Off Connector and Grommet | 10, 20, 50, 100 |
| | **End Closer** | |
| RXLEC13 | 13mm Lateral End Closer | 10, 20, 50, 100 |
| RXLEC16 | 16mm Lateral End Closer | 10, 20, 50, 100 |
| RXLEC19 | 19mm Lateral End Closer | 10, 20, 50, 100 |
| | **BSP Threaded Connector** | |
| RXLTC13.15 | 13mm x 15mm BSP Threaded Connector | 10 |
| RXLTC16.15 | 16mm x 15mm BSP Threaded Connector | 10 |
| RXLTC19.15 | 19mm x 15mm BSP Threaded Connector | 10 |
| RXLTC19.20 | 19mm x 20mm BSP Threaded Connector | 10 |
| RXLTC25.25 | 25mm x 25mm BSP Threaded Connector | 10 |
| | **Reducing Joiner** | |
| RXLRJ1613 | 16mm x 13mm Reducing Lateral Joiner | 10, 20, 50, 100 |
| RXLRJ1913 | 19mm x 13mm Reducing Lateral Joiner | 10, 20, 50, 100 |
| RXLRJ1916 | 19mm x 16mm Reducing Lateral Joiner | 10, 20, 50, 100 |
| RXLRJ2513 | 25mm x 13mm Reducing Lateral Joiner | 10, 20, 50, 100 |
| RXLRJ2516 | 25mm x 16mm Reducing Lateral Joiner | 10, 20, 50, 100 |
| RXLRJ2519 | 25mm x 19mm Reducing Lateral Joiner | 10, 20, 50, 100 |
| | **Barbed Tee** | |
| RXLT13 | 13mm Barbed Lateral Tee | 10, 20, 50, 100 |
| RXLT16 | 16mm Barbed Lateral Tee | 10, 20, 50, 100 |
| RXLT19 | 19mm Barbed Lateral Tee | 10, 20, 50, 100 |
| RXLT25 | 25mm Barbed Lateral Tee | 10, 20, 50, 100 |















# IRRIGATION FITTINGS AND SPRINKLERS

| RXP Code | Description | Pack Quantity |
|---|---|---|
| | **Reducing Tee** | |
| RXLRT1613 | 16mm x 13mm Reducing Lateral Tee | 100 |
| RXLRT1913 | 19mm x 13mm Reducing Lateral Tee | 100 |
| RXLRT1916 | 19mm x 16mm Reducing Lateral Tee | 100 |
| RXLRT2513 | 25mm x 13mm Reducing Lateral Tee | 25 |
| RXLRT2516 | 25mm x 16mm Reducing Lateral Tee | 25 |
| RXLRT2519 | 25mm x 19mm Reducing Lateral Tee | 25 |



| | | |
|---|---|---|
| | **Increasing Tee** | |
| RXLIT1316 | 13mm x 16mm Lateral Increasing Tee | 25 |
| RXLIT1319 | 13mm x 19mm Lateral Increasing Tee | 20 |
| RXLIT1619 | 16mm x 19mm Lateral Increasing Tee | 25 |
| RXLIT1925 | 19mm x 25mm Lateral Increasing Tee | 25 |



| | | |
|---|---|---|
| | **BSP Threaded Male Tee** | |
| RXLTMT13 | 13 x 15mm BSP Lateral Threaded Male Tee | 25 |
| RXLTMT19 | 19 x 15mm BSP Lateral Threaded Male Tee | 25 |
| RXLTMT25 | 25 x 20mm BSP Lateral Threaded Male Tee | 25 |



| | | |
|---|---|---|
| | **BSP Threaded Female Tee** | |
| RXLTFT13 | 13 x 15mm BSP Lateral Threaded Female Tee | 20 |
| RXLTFT19 | 19 x 15mm BSP Lateral Threaded Female Tee | 25 |
| RXLTFT25 | 25 x 15mm BSP Lateral Threaded Female Tee | 25 |



| | | |
|---|---|---|
| | **90° Elbow** | |
| RXLE13 | 13mm Lateral 90° Elbow | 10, 20, 50, 100 |
| RXLE16 | 16mm Lateral 90° Elbow | 10, 20, 50, 100 |
| RXLE19 | 19mm Lateral 90° Elbow | 10, 20, 50, 100 |
| RXLE25 | 25mm Lateral 90° Elbow | 25 |



| | | |
|---|---|---|
| | **BSP Threaded Male & Female 90° Elbows** | |
| RXLTE19M | 19 x 15mm BSP Threaded Male 90° Elbow | 25 |
| RXLTE25M | 25 x 20mm BSP Threaded Male 90° Elbow | 25 |
| RXLTE13F | 13 x 15mm BSP Threaded Female 90° Elbow | 25 |
| RXLTE19F | 19 x 15mm BSP Threaded Female 90° Elbow | 25 |



| | | |
|---|---|---|
| | **Top Hat Grommett** | |
| RXLTHG13 | 13mm Top Hat Grommett | 50 |
| RXLTHG16 | 16mm Top Hat Grommett | 100 |



# IRRIGATION FITTINGS AND SPRINKLERS

| RXP Code | Description | Pack Quantity |
|---|---|---|
| | **Double Flange Grommett** | |
| RXLDFG13 | 13mm Double Flange Grommett (Suitable for 13mm take off connector) | 100 |
| RXLDFG16.19 | 16/19mm Double Flange Grommett (Suitable for 16 and 19mm take off connector) | 10, 20, 50, 100 |
| | **Goof and Lateral Plugs** | |
| RXLGP | Goof Plug - Dripper Dome Head | 100 |
| RXLP4 | 4mm Lateral Plug (pack of 100 - price each) | 100 |
| RXLP7 | 7mm Lateral Plug (pack of 100 - price each) | 100 |
| | **Cray Clips** | |
| RXLCC15 | Cray Clip To Suit 13mm Lateral for Single and Double Barbed Fittings | 100 |
| RXLCC19 | Cray Clip To Suit 16mm Lateral for Single and Double Barbed Fittings | 100 |
| RXLCC23 | Cray Clip To Suit 19mm Lateral for Single and Double Barbed Fittings | 100 |
| RXLCC29 | Cray Clip To Suit 25mm Lateral for Single and Double Barbed Fittings | 100 |
| | **Screwed Riser Adaptor** | |
| RXLRA | 4mm Screwed Riser Adaptor | 100 |
| | **Nut and Tail** | |
| RXLNT13.20 | 13mm Tail x 20mm (¾" BSP) Nut | 10 |
| RXLNT13.25 | 13mm Tail x 25mm (1" BSP) Nut | 25 |
| RXLNT16.20 | 16mm Tail x 20mm (¾" BSP) Nut | 10 |
| RXLNT16.25 | 16mm Tail x 25mm (1" BSP) Nut | 25 |
| RXLNT19.20 | 19mm Tail x 20mm (¾" BSP) Nut | 25 |
| RXLNT19.25 | 19mm Tail x 25mm (1" BSP) Nut | 25 |
| RXLNT25.25 | 25mm Tail x 25mm (1" BSP) Nut | 25 |
| | **Inline Filter** | |
| RXLIF13 | 13mm Inline Filter, Black Body | 1 |
| RXLIF16 | 16mm Inline Filter, Black Body | 1 |
| RXLIF19 | 19mm Inline Filter, Black Body | 1 |
| RXLIF25 | 25mm Inline Filter, Black Body | 1 |
| RXLIFC | Cartridge for Inline Filters (fits 13mm - 25mm) | 1 |
| | **End Plug** | |
| RXLEP13 | 13mm Lateral End Plug | 25 |
| RXLEP16 | 16mm Lateral End Plug | 25 |
| RXLEP19 | 19mm Lateral End Plug | 25 |
| RXLEP25 | 25mm Lateral End Plug | 25 |

















# IRRIGATION FITTINGS AND SPRINKLERS

| RXP Code | Description | Pack Quantity |
|---|---|---|
| | **Pipe Hole Punch** | |
| RXLHP | Lateral Pipe Hole Punch | 25 |
| | **T-Tape Connector x T-Tape** | |
| RXLTTC13 | T-Tape Connector 13mm x T-Tape | 50 |
| RXLTTC16 | T-Tape Connector 16mm x T-Tape | 50 |
| | **T-Tape Tee x T-Tape** | |
| RXLTTT13 | T-Tape Tee 13mm x T-Tape | 50 |
| | **T-Tape x T-Tape Joiner** | |
| RXLTTJ | T-Tape x T-Tape Joiner | 50 |
| | **Quick Action Shut Off Valve** | |
| RXLSOV13 | 13mm Quick Action Shut Off Valve | 20 |
| RXLSOV16 | 16mm Quick Action Shut Off Valve | 20 |
| RXLSOV19 | 19mm Quick Action Shut Off Valve | 20 |
| RXLSOV25 | 25mm Quick Action Shut Off Valve | 20 |
| | **Self-Compensating Dripper** | |
| RXLD2SC | 2.Lph Self-Compensating Dripper | 100 |
| RXLD4SC | 4.Lph Self-Compensating Dripper | 100 |
| Self-compensating drippers will only ever allow 2 or 4 litres per hour regardless of any fluctuations in pressure in the line - therefore used when tight control of watering levels are required. | | |
| | **Non-Compensating Dripper** | |
| RXLD2NC | 2.Lph Non-Compensating Dripper | 100 |
| RXLD4NC | 4.Lph Non-Compensating Dripper | 100 |
| Non-compensating drippers will fluctuate in flow if there is extra pressure in the line. | | |
| | **Sprinkler Stakes** | |
| RXLSTM5.55 | 5mm Threaded Stake complete with Micro Sprinkler - 55 Lph and 60mm x 4mm tube and barb | 1 |
| RXNSS | Black Sprinkler Stake suitable for use with 4/7mm tubing | 1 |
| RXLST5 | 5mm Threaded Stake only | 1 |
| RXLSST | Sprinkler Stake for Dan Sprinklers only | 1 |











# IRRIGATION FITTINGS AND SPRINKLERS

## Sprinklers

- Durable and reliable with excellent distribution uniformity.
- Suitable for vegetables, ornamentals, landscaped gardens, commercial tree and vine crops.

| RXP Code | Description | Pack Quantity |
|---|---|---|
| | Micro Sprinklers | |
| RXLMS.55 | Micro Sprinkler only - 55 Lph (White) | 50 |
| RXLMS.90 | Micro Sprinkler only - 90 Lph (Green) | 50 |
| RXLMFS35 | Micro Flow Sprinkler - 35 Lph (Brown) | 50 |
| RXLMFS42 | Micro Flow Sprinkler - 42 Lph (Blue) | 50 |
| RXLMFS76 | Micro Flow Sprinkler - 75 Lph (Green) | 50 |
| RXLMFS120 | Micro Flow Sprinkler - 120 Lph (Red) | 50 |
| | Microjets | |
| RXLMJ90 | Microjet Blue Base 42 Lph @ 150kpa 2.4m radius - 90 degrees | 100 |
| RXLMJ180 | Microjet Blue Base 42 Lph @ 150kpa 2.0m radius - 180 degrees | 100 |
| RXLMJ360 | Microjet Blue Base 42 Lph @ 150kpa 5.8m diameter 18 holes - 360 degrees | 100 |







## Filtration

- Reinforced nylon injection moulded body.
- Nominal 10 bar pressure rating.
- Metal reinforced 1" female outlet, needs to be drilled to make "live".
- 2" BSP threaded connections.
- Available with 130 micron disc.
- Extendable spline on frame for manual disc cleaning.

| | 2" BSP Disc Filters |
|---|---|
| FILT.50DISC.130 | 50mm 2" BSP Disc Filter - 130 Micron |
| FILT.50DISC.130.LONG | 50mm 2" BSP Disc Filter Long Body - 130 Micron |



- High resistance thermoplastic injection moulded body.
- Nominal 10 bar pressure rating.
- ¾", 1", 1¼" and 1½" BSP threaded connections.
- 1¼" and 1½" need to be drilled to make "live".
- Available with screen or disc, 100 micron or 130 micron.

| | BSP Disc Filters |
|---|---|
| FILT.20DISC.130 | 20mm ¾" BSP Disc Filter - 130 Micron |
| FILT.25DISC.130 | 25mm 1" BSP Disc Filter - 130 Micron |
| FILT.32DISC.130 | 32mm 1¼" BSP Disc Filter - 130 Micron |
| FILT.40DISC.130 | 40mm 1½" BSP Disc Filter - 130 Micron |
| FILT.20DISC.100 | 20mm ¾" BSP Disc Filter - 100 Micron |
| FILT.25DISC.100 | 25mm 1" BSP Disc Filter - 100 Micron |
| FILT.32DISC.100 | 32mm 1¼" BSP Disc Filter - 100 Micron |
| FILT.40DISC.100 | 40mm 1½" BSP Disc Filter - 100 Micron |



130 Micron



100 Micron

# IRRIGATION FITTINGS AND SPRINKLERS

| RXP Code | Description |
|---|---|
| | BSP Screen Filters |
| FILT.20SCREEN.130 | 20mm ¾" BSP Screen Filter - 130 Micron |
| FILT.25SCREEN.130 | 25mm 1 BSP" Screen Filter - 130 Micron |
| FILT.32SCREEN.130 | 32mm 1 ¾" BSP Screen Filter - 130 Micro |
| FILT.40SCREEN.130 | 40mm 1 ½" BSP Screen Filter - 130 Micro |
| FILT.20SCREEN.100 | 20mm ¾" BSP Filter - Screen Blue 100 Micron |
| FILT.25SCREEN.100 | 25mm 1" BSP Screen Filter - 100 Micron |
| FILT.32SCREEN.100 | 32mm 1 ¾" BSP Screen Filter - 100 Micro |
| FILT.40SCREEN.100 | 40mm 1 ½" BSP Screen Filter - 100 Micro |



130 Micron



100 Micron

| | Replacement Discs for Filters |
|---|---|
| FILT.DISC.2025.130 | 20-25mm ¾" - 1" Replacement Disc - 130 Micron |
| FILT.DISC.3240.130 | 32-40mm 1 ¼"- 1 ½" Replacement Disc - 130 Micron |
| FILT.DISC.2025.100 | 20-25mm ¾" - 1" Replacement Disc - 100 Micron |
| FILT.DISCOC.3240.100 | 32-40mm 1 ¼"- 1 ½" Replacement Disc - 100 Micron |



130 Micron



100 Micron

| | Replacement Screens for Filters |
|---|---|
| FILT.SCREEN.2025.130 | 20-25mm ¾" - 1" Replacement Screen - 130 Micron |
| FILT.SCREEN.3240.130 | 32-40mm 1 ¼"- 1 ½" Replacement Screen - 130 Micron |
| FILT.SCREEN.2025.100 | 20-25mm ¾" - 1" Replacement Screen - 100 Micron |
| FILT.SCREEN.3240.100 | 32-40mm 1 ¼"- 1 ½" Replacement Screen - 100 Micron |



130 Micron



100 Micron

# VALVES AND GAUGES

## Pressure Valves

- The use of air release valves in hydraulic pipelines is necessary and one of the most important safety elements in all water and irrigation installations. They are used to prevent negative pressures in the network and over pressure generated by the presence of air in the pipeline.

| RXP Code | Description | Kpa/Psi Pressure Rating @ 20°C |
|---|---|---|
| | **Vacuum Breaker** | |
| RXVB15 | 15mm (½") Vacuum Breaker | |
| RXVB20 | 20mm (¾") Vacuum Breaker | |
| | **Air Release Valve** | |
| X294.20.ARV | 20mm (¾") BSP X-294 Air Release Valve | 1600/232 |
| X294.25.ARV | 25mm (1") BSP X-294 Air Release Valve | 1600/232 |
| X294.40.ARV | 40mm (1½") BSP X-294 Air Release Valve | 1600/232 |
| X294.50.ARV | 50mm (2") BSP X-294 Air Release Valve | 1600/232 |
| | **Air Release Double Acting Valve** | |
| X295.20.ARVD | 20mm (¾") BSP X-295 Double Acting Valve | 1600/232 |
| X295.25.ARVD | 25mm (1") BSP X-295 Double Acting Valve | 1600/232 |
| X295.40.ARVD | 40mm (1½") BSP X-295 Double Acting Valve | 1600/232 |
| X295.50.ARVD | 50mm (2") BSP X-295 Double Acting Valve | 1600/232 |
| | **Pressure Reducing Valve (Not suitable for potable water)** | |
| RXPRV15 | 15mm Pressure Reducing Valve | 1516/220 |
| RXPRV20 | 20mm Pressure Reducing Valve | 1516/220 |
| RXPRV25 | 25mm Pressure Reducing Valve | 1516/220 |
| RXPRV32 | 32mm Pressure Reducing Valve | 1516/220 |
| RXPRV40 | 40mm Pressure Reducing Valve | 1516/220 |
| RXPRV50 | 50mm Pressure Reducing Valve | 1516/220 |
| Pressure Reducing Valve Working Pressure:- Inlet up to 25 bar, Outlet 0.5 - 6 bar | | |
| | **K-Line Pressure Reducing Valve** | |
| KLPRV40.30 | 1½" BSP Pressure Reducing Valve - 30M Spring | |
| KLPRV40.35 | 1½" BSP Pressure Reducing Valve - 35M Spring | |
| KLPRV40.40 | 1½" BSP Pressure Reducing Valve - 40M Spring | |
| KLPRV40.45 | 1½" BSP Pressure Reducing Valve - 45M Spring | |

Refer to K-Line Technical Manual for specifications of these pressure reducing valves.
K-Line Pressure Reducing Valve Working Pressure:- Inlet up to 10 bar, Outlet 3 - 4.5 bar











# VALVES AND GAUGES

## Plastic Valves

| RXP Code | Description | Kpa/Psi Pressure Rating @ 20°C |
|---|---|---|
| | **Plastic Check Valve** | |
| ACV15 | 15mm Plastic Check Valve | 1600/230 |
| ACV20 | 20mm Plastic Check Valve | 1600/230 |
| ACV25 | 25mm Plastic Check Valve | 1600/230 |
| ACV32 | 32mm Plastic Check Valve | 1600/230 |
| ACV40 | 40mm Plastic Check Valve | 1600/230 |
| ACV50 | 50mm Plastic Check Valve | 1600/230 |



| | | |
|---|---|---|
| | **Plastic Check Valve Filter Screen** | |
| AFS20 | 20mm Plastic Check Valve Filter Screen | |
| AFS25 | 25mm Plastic Check Valve Filter Screen | |
| AFS32 | 32mm Plastic Check Valve Filter Screen | |
| AFS40 | 40mm Plastic Check Valve Filter Screen | |
| AFS50 | 50mm Plastic Check Valve Filter Screen | |



FOOT VALVES - Please order the check valve and screen as above - sold as separate units.

| | | |
|---|---|---|
| | **Quick Coupling Valve** | |
| PQRV20RK | 20mm (¾") Key For Quick Coupling Valve | |
| PQRV20C | 20mm (¾") Quick Coupling Valve Body | |
| PQRV25C | 25mm (1") Quick Coupling Valve Body | |
| To order complete unit order body and key. | | |





| | | |
|---|---|---|
| | **Plastic Angle Seat Valve** | |
| PASV25 | 25mm (1") Plastic Angle Seat Valve | |
| PASV32 | 32mm (1¼") Plastic Angle Seat Valve | |
| PASV40 | 40mm (1½") Plastic Angle Seat Valve | |
| PASV50 | 50mm (2") Plastic Angle Seat Valve | |



| | | |
|---|---|---|
| | **Philmac Ball Valve** | |
| RXBV15 | 15mm Philmac Ball Valve | 1600/230 |
| RXBV20 | 20mm Philmac Ball Valve | 1600/230 |
| RXBV25 | 25mm Philmac Ball Valve | 1600/230 |
| RXBV32 | 32mm Philmac Ball Valve | 1600/230 |
| RXBV40 | 40mm Philmac Ball Valve | 1600/230 |
| RXBV50 | 50mm Philmac Ball Valve | 1600/230 |



# VALVES AND GAUGES

| RXP Code | Description | Kpa/Psi Pressure Rating @ 20°C |
|---|---|---|
| | **Plastic Ball Valve** | |
| RXPBV15 | 15mm Plastic Ball Valve | 690/100 |
| RXPBV20 | 20mm Plastic Ball Valve | 690/100 |
| RXPBV25 | 25mm Plastic Ball Valve | 690/100 |
| RXPBV32 | 32mm Plastic Ball Valve | 690/100 |
| RXPBV40 | 40mm Plastic Ball Valve | 690/100 |
| RXPBV50 | 50mm Plastic Ball Valve | 690/100 |
| RXPBV80 | 80mm Plastic Ball Valve | 690/100 |
| RXPBV100 | 100mm Plastic Ball Valve | 690/100 |



| | | |
|---|---|---|
| | **Plastic Stop Valve** | |
| RXPSV20 | 20mm Plastic Stop Valve | 1000/145 |



## Brass and Stainless Steel Gate Valves and Taps

| | | |
|---|---|---|
| | **Female Brass Gate Valve (Not suitable for potable water)** | |
| RXBGV15 | 15mm Female/Female Brass Gate Valve | 1378/200 |
| RXBGV20 | 20mm Female/Female Brass Gate Valve | 1378/200 |
| RXBGV25 | 25mm Female/Female Brass Gate Valve | 1378/200 |
| RXBGV32 | 32mm Female/Female Brass Gate Valve | 1378/200 |
| RXBGV40 | 40mm Female/Female Brass Gate Valve | 1378/200 |
| RXBGV50 | 50mm Female/Female Brass Gate Valve | 1378/200 |
| RXBGV65 | 65mm Female/Female Brass Gate Valve | 1378/200 |
| RXBGV80 | 80mm Female/Female Brass Gate Valve | 1378/200 |
| RXBGV100 | 100mm Female/Female Brass Gate Valve | 1378/200 |



| | | |
|---|---|---|
| | **Female SS 304 Gate Valve (Suitable for potable water)** | |
| SS.GV15 | 15mm (½") Female/Female SS 304 Gate Valve | 1600/232 |
| SS.GV20 | 20mm (¾")Female/Female SS 304 Gate Valve | 1600/232 |
| SS.GV25 | 25mm (1")Female/Female SS 304 Gate Valve | 1600/232 |
| SS.GV32 | 32mm (1¼") Female/Female SS 304 Gate Valve | 1600/232 |
| SS.GV40 | 40mm (1½") Female/Female SS 304 Gate Valve | 1600/232 |
| SS.GV50 | 50mm (2")Female/Female SS 304 Gate Valve | 1600/232 |
| SS.GV65 | 65mm (2½") Female/Female SS 304 Gate Valve | 1600/232 |
| SS.GV80 | 80mm (3") Female/Female SS 304 Gate Valve | 1600/232 |
| SS.GV100 | 100mm (4") Female/Female SS 304 Gate Valve | 1600/232 |



| | | |
|---|---|---|
| | **Hose Tap Male (Suitable for potable water)** | |
| RXBHT15 | 15mm Hose Tap Male | |
| RXBHT20 | 20mm Hose Tap Male | |



# VALVES AND GAUGES

| RXP Code | Description | Kpa/Psi Pressure Rating @ 20°C |
|---|---|---|
| | Washing Machine Taps (Not suitable for potable water) | |
| RXWMT15 | 15mm Angled Washing Machine Tap | 1600/232 |
| RX3WMT15 | 15mm 3-Way Washing Machine Tap | 1600/232 |



## Metal Ball Valves - Short Thread - Full Flow (Basic Type)

| | Metal Ball Valve - Short Thread (Not suitable for potable water) | |
|---|---|---|
| RXBVS15 | 15mm Metal Ball Valve Short Thread | 5000/725 |
| RXBVS20 | 20mm Metal Ball Valve Short Thread | 4000/580 |
| RXBVS25 | 25mm Metal Ball Valve Short Thread | 4000/580 |
| RXBVS32 | 32mm Metal Ball Valve Short Thread | 3000/435 |
| RXBVS40 | 40mm Metal Ball Valve Short Thread | 3000/435 |
| RXBVS50 | 50mm Metal Ball Valve Short Thread | 2500/363 |
| RXBVS65 | 65mm Metal Ball Valve Short Thread | 1800/261 |
| RXBVS80 | 80mm Metal Ball Valve Short Thread | 1600/232 |



| | Female SS 304 Metal Ball Valve (Suitable for potable water) | |
|---|---|---|
| SS.BVS20 | 20mm (¾") SS 304 Ball Valve - Short Thread | 1600/232 |
| SS.BVS25 | 25mm SS (1") 304 Ball Valve - Short Thread | 1600/232 |
| SS.BVS32 | 32mm SS (1¼") 304 Ball Valve - Short Thread | 1600/232 |
| SS.BVS40 | 40mm SS (1½") 304 Ball Valve - Short Thread | 1600/232 |
| SS.BVS50 | 50mm SS (2") 304 Ball Valve - Short Thread | 1600/232 |
| SS.BVS65 | 65mm SS (2½") 304 Ball Valve - Short Thread | 1600/232 |
| SS.BVS80 | 80mm SS(3") 304 Ball Valve - Short Thread | 1600/232 |
| SS.BVS100 | 100mm SS(4") 304 Ball Valve - Short Thread | 1600/232 |



## Pressure Gauges

| | Pressure Gauge - Bottom Entry (Not suitable for potable water) | |
|---|---|---|
| RXPG80 | Pressure Gauge - Bottom Entry | 0-600/87 |
| RXPG145 | Pressure Gauge - Bottom Entry | 0-1000/145 |
| RXPG230 | Pressure Gauge - Bottom Entry | 0-1600/230 |
| RXPG360 | Pressure Gauge - Bottom Entry | 0-2500/350 |
| RXPG870 | Pressure Gauge - Bottom Entry | 0-6000/800 |



| | Pressure Gauge - Rear Entry (Not suitable for potable water) | |
|---|---|---|
| RXPG145RE | Pressure Gauge - Rear Entry | 0-1000/145 |
| RXPG870RE | Pressure Gauge - Rear Entry | 0-6000/800 |



Stainless Steel Case - Glycerine Filled, Brass Element and Movement
¼" BSPT Connection. Check RX BSP Threaded fittings section for connectors

# VALVES AND GAUGES

## Brass and Stainless Steel Valves

| RXP Code | Description | Kpa/Psi Pressure Rating @ 20°C |
|---|---|---|
| | **Brass 'Y' Filter Valve (Not suitable for potable water)** | |
| RXYBF15 | 15mm Brass 'Y' Filter Valve | 1654/240 |
| RXYBF20 | 20mm Brass 'Y' Filter Valve | 1654/240 |
| RXYBF25 | 25mm Brass 'Y' Filter Valve | 1654/240 |
| RXYBF32 | 32mm Brass 'Y' Filter Valve | 1654/240 |
| RXYBF40 | 40mm Brass 'Y' Filter Valve | 1654/240 |
| RXYBF50 | 50mm Brass 'Y' Filter Valve | 1654/240 |



| | | |
|---|---|---|
| | **Female SS 304 'Y' Filter (Suitable for potable water)** | |
| SS.YSF15 | 15mm (½") SS 304 'Y' Filter | |
| SS.YSF20 | 20mm (¾") SS 304 'Y' Filter | |
| SS.YSF25 | 25mm (1") SS 304 'Y' Filter | |
| SS.YSF32 | 32mm (1¼")SS 304 'Y' Filter | |
| SS.YSF40 | 40mm (1½") SS 304 'Y' Filter | |
| SS.YSF50 | 50mm (2") SS 304 'Y' Filter | |



| | | |
|---|---|---|
| | **Brass Check Valve (Not suitable for potable water)** | |
| RXCKV15 | 15mm Brass Check Valve | 2500/363 |
| RXCKV20 | 20mm Brass Check Valve | 2500/363 |
| RXCKV25 | 25mm Brass Check Valve | 2500/363 |
| RXCKV32 | 32mm Brass Check Valve | 1800/261 |
| RXCKV40 | 40mm Brass Check Valve | 1800/261 |
| RXCKV50 | 50mm Brass Check Valve | 1800/261 |
| RXCKV65 | 65mm Brass Check Valve | 1200/174 |
| RXCKV80 | 80mm Brass Check Valve | 1200/174 |
| RXCKV100 | 100mm Brass Check Valve | 1200/174 |



| | | |
|---|---|---|
| | **Female SS 304 Spring Check Valve (Suitable for potable water)** | |
| SS.CKV15 | 15mm (½") SS 304 Check Valve | 1600/232 |
| SS.CKV20 | 20mm (¾") SS 304 Check Valve | 1600/232 |
| SS.CKV25 | 25mm (1") SS 304 Check Valve | 1600/232 |
| SS.CKV32 | 32mm (1¼")SS 304 Check Valve | 1600/232 |
| SS.CKV40 | 40mm (1½")SS 304 Check Valve | 1600/232 |
| SS.CKV50 | 50mm (2") SS 304 Check Valve | 1600/232 |
| SS.CKV65 | 65mm (2½") SS 304 Check Valve | 1600/232 |
| SS.CKV80 | 80mm (3") SS 304 Check Valve | 1600/232 |
| SS.CKV100 | 100mm (4") SS 304 Check Valve | 1600/232 |



# VALVES AND GAUGES

| RXP Code | Description | Kpa/Psi Pressure Rating @ 20°C |
|---|---|---|
| | **Stainless Steel Check Valve Filter (Suitable for potable water)** | |
| RXSSF15 | 15mm Stainless Steel Check Valve Filter | |
| RXSSF20 | 20mm Stainless Steel Check Valve Filter | |
| RXSSF25 | 25mm Stainless Steel Check Valve Filter | |
| RXSSF32 | 32mm Stainless Steel Check Valve Filter | |
| RXSSF40 | 40mm Stainless Steel Check Valve Filter | |
| RXSSF50 | 50mm Stainless Steel Check Valve Filter | |
| RXSSF65 | 65mm Stainless Steel Check Valve Filter | |
| RXSSF80 | 80mm Stainless Steel Check Valve Filter | |
| RXSSF100 | 100mm Stainless Steel Check Valve Filter | |



| | | |
|---|---|---|
| | **Brass Swing Check Valve (Not suitable for potable water)** | |
| RXSCV15 | 15mm Brass Swing Check Valve | 1172/170 |
| RXSCV20 | 20mm Brass Swing Check Valve | 1172/170 |
| RXSCV25 | 25mm Brass Swing Check Valve | 1172/170 |
| RXSCV32 | 32mm Brass Swing Check Valve | 965/140 |
| RXSCV40 | 40mm Brass Swing Check Valve | 965/140 |
| RXSCV50 | 50mm Brass Swing Check Valve | 965/140 |
| RXSCV65 | 65mm Brass Swing Check Valve | 758/110 |
| RXSCV80 | 80mm Brass Swing Check Valve | 758/110 |
| RXSCV100 | 100mm Brass Swing Check Valve | 758/110 |



| | | |
|---|---|---|
| | **Female SS 304 Swing Check Valve (Suitable for potable water)** | |
| SS.SCV15 | 15mm Brass Swing Check Valve | 1600/232 |
| SS.SCV20 | 20mm Brass Swing Check Valve | 1600/232 |
| SS.SCV25 | 25mm Brass Swing Check Valve | 1600/232 |
| SS.SCV32 | 32mm Brass Swing Check Valve | 1600/232 |
| SS.SCV40 | 40mm Brass Swing Check Valve | 1600/232 |
| SS.SCV50 | 50mm Brass Swing Check Valve | 1600/232 |
| SS.SCV65 | 65mm Brass Swing Check Valve | 1600/232 |
| SS.SCV80 | 80mm Brass Swing Check Valve | 1600/232 |
| SS.SCV100 | 100mm Brass Swing Check Valve | 1600/232 |



| | | |
|---|---|---|
| | **Bibcock Hose Type Valve - Short (Not suitable for potable water)** | |
| RXBIBS15 | 15mm Bibcock Hose Type Valve - Short | 1516/220 |
| RXBIBS20 | 20mm Bibcock Hose Type Valve - Short | 1516/220 |



| | | |
|---|---|---|
| | **Bibcock Hose Type Valve - Long (Not suitable for potable water)** | |
| RXBIBL15 | 15mm Bibcock Hose Type Valve - Long | 1516/220 |
| RXBIBL20 | 20mm Bibcock Hose Type Valve - Long | 1516/220 |



| | | |
|---|---|---|
| | **Mini Ball Valve (Not suitable for potable water)** | |
| RXMBV15 | 15mm Mini Ball Valve | 1516/220 |
| RXMBV20 | 20mm Mini Ball Valve | 1516/220 |



# CAMLOCKS, HOSECLIPS AND CLAMPS

## Effluent Camlocks
## Aluminium Agricultural (AG) Couplings

| RXP Code | Description | Camlock Size | Pipe OD |
|---|---|---|---|
| | Coupler to Hose Tail | | |
| AGC7690 | 76-90 Female Coupler To Hose Tail | 76 | 90 |
| AGC7675 | 76-75 Female Coupler To Hose Tail | 76 | 75 |
| AGC7663 | 76-63 Female Coupler To Hose Tail | 76 | 63 |
| AGC6475 | 64-75 Female Coupler To Hose Tail | 64 | 75 |
| AGC6463 | 64-63 Female Coupler To Hose Tail | 64 | 63 |
| AGC5163 | 51-63 Female Coupler To Hose Tail | 51 | 63 |



| | Male Adaptor to Hose Tail | | |
|---|---|---|---|
| AGE7690 | 76-90 Male Adaptor To Hose Tail | 76 | 90 |
| AGE7675 | 76-75 Male Adaptor To Hose Tail | 76 | 75 |
| AGE7663 | 76-63 Male Adaptor To Hose Tail | 76 | 63 |
| AGE6475 | 64-75 Male Adaptor To Hose Tail | 64 | 75 |
| AGE6463 | 64-63 Male Adaptor To Hose Tail | 64 | 63 |
| AGE5163 | 51-63 Male Adaptor To Hose Tail | 51 | 63 |



| | Double Hosetail | | |
|---|---|---|---|
| DHT9090 | 90-90 Double Hosetail | 90 | 90 |
| DHT9063 | 90-63 Double Hosetail | 90 | 63 |
| DHT7575 | 75-75 Double Hosetail | 75 | 75 |
| DHT7563 | 75-63 Double Hosetail | 75 | 63 |
| DHT6363 | 63-63 Double Hosetail | 63 | 63 |



AG Couplings are coded as standard camlock sizes with tail to fit OD poly pipe.

# CAMLOCKS, HOSECLIPS AND CLAMPS

## Aluminium General Purpose (GP) Camlocks

| RXP Code | Description |
|---|---|
| | Female Threaded Adaptor |
| CAM19A | 19mm Female Threaded Adaptor |
| CAM25A | 25mm Female Threaded Adaptor |
| CAM32A | 32mm Female Threaded Adaptor |
| CAM38A | 38mm Female Threaded Adaptor |
| CAM51A | 51mm Female Threaded Adaptor |
| CAM64A | 64mm Female Threaded Adaptor |
| CAM76A | 76mm Female Threaded Adaptor |
| CAM102A | 102mm Female Threaded Adaptor |
| CAM152A | 152mm Female Threaded Adaptor |



| | Male Threaded Coupler |
|---|---|
| CAM19B | 19mm Male Threaded Coupling |
| CAM25B | 25mm Male Threaded Coupling |
| CAM32B | 32mm Male Threaded Coupling |
| CAM38B | 38mm Male Threaded Coupling |
| CAM51B | 51mm Male Threaded Coupling |
| CAM64B | 64mm Male Threaded Coupling |
| CAM76B | 76mm Male Threaded Coupling |
| CAM102B | 102mm Male Threaded Coupling |
| CAM152B | 152mm Male Threaded Coupling |



| | Hose Shank Coupling |
|---|---|
| CAM19C | 19mm Hose Shank Coupling |
| CAM25C | 25mm Hose Shank Coupling |
| CAM32C | 32mm Hose Shank Coupling |
| CAM38C | 38mm Hose Shank Coupling |
| CAM51C | 51mm Hose Shank Coupling |
| CAM64C | 64mm Hose Shank Coupling |
| CAM76C | 76mm Hose Shank Coupling |
| CAM102C | 102mm Hose Shank Coupling |
| CAM152C | 152mm Hose Shank Coupling |



| | Female Threaded Coupling |
|---|---|
| CAM19D | 19mm Female Threaded Coupling |
| CAM25D | 25mm Female Threaded Coupling |
| CAM32D | 32mm Female Threaded Coupling |
| CAM38D | 38mm Female Threaded Coupling |
| CAM51D | 51mm Female Threaded Coupling |
| CAM64D | 64mm Female Threaded Coupling |
| CAM76D | 76mm Female Threaded Coupling |
| CAM102D | 102mm Female Threaded Coupling |
| CAM152D | 152mm Female Threaded Coupling |



# CAMLOCKS, HOSECLIPS AND CLAMPS

| RXP Code | Description |
|---|---|
| | Hose Shank Adaptor |
| CAM19E | 19mm Hose Shank Adaptor |
| CAM25E | 25mm Hose Shank Adaptor |
| CAM32E | 32mm Hose Shank Adaptor |
| CAM38E | 38mm Hose Shank Adaptor |
| CAM51E | 51mm Hose Shank Adaptor |
| CAM64E | 64mm Hose Shank Adaptor |
| CAM76E | 76mm Hose Shank Adaptor |
| CAM102E | 102mm Hose Shank Adaptor |
| CAM152E | 152mm Hose Shank Adaptor |



| | |
|---|---|
| | Male Threaded Adaptor |
| CAM19F | 19mm Male Threaded Adaptor |
| CAM25F | 25mm Male Threaded Adaptor |
| CAM32F | 32mm Male Threaded Adaptor |
| CAM38F | 38mm Male Threaded Adaptor |
| CAM51F | 51mm Male Threaded Adaptor |
| CAM64F | 64mm Male Threaded Adaptor |
| CAM76F | 76mm Male Threaded Adaptor |
| CAM102F | 102mm Male Threaded Adaptor |
| CAM152F | 152mm Male Threaded Adaptor |



| | |
|---|---|
| | Dust Cap |
| CAM19DC | 19mm Dust Cap |
| CAM25DC | 25mm Dust Cap |
| CAM32DC | 32mm Dust Cap |
| CAM38DC | 38mm Dust Cap |
| CAM51DC | 51mm Dust Cap |
| CAM64DC | 64mm Dust Cap |
| CAM76DC | 76mm Dust Cap |
| CAM102DC | 102mm Dust Cap |
| CAM152DC | 152mm Dust Cap |



| | |
|---|---|
| | Dust Plug |
| CAM19DP | 19mm Dust Plug |
| CAM25DP | 25mm Dust Plug |
| CAM32DP | 32mm Dust Plug |
| CAM38DP | 38mm Dust Plug |
| CAM51DP | 51mm Dust Plug |
| CAM64DP | 64mm Dust Plug |
| CAM76DP | 76mm Dust Plug |
| CAM102DP | 102mm Dust Plug |
| CAM152DP | 152mm Dust Plug |



# CAMLOCKS, HOSECLIPS AND CLAMPS

## Polypropylene (PP) Camlocks

| RXP Code | Description |
|---|---|
| | **Camlock Seal** |
| CAM19S | 19mm Camlock Seal |
| CAM25S | 25mm Camlock Seal |
| CAM32S | 32mm Camlock Seal |
| CAM38S | 38mm Camlock Seal |
| CAM51S | 51mm Camlock Seal |
| CAM64S | 64mm Camlock Seal |
| CAM76S | 76mm Camlock Seal |
| CAM102S | 102mm Camlock Seal |
| CAM152S | 152mm Camlock Seal |



| | |
|---|---|
| | **Polyprop Female Threaded Adaptor** |
| CAMPP19A | 19mm Polyprop Female Threaded Adaptor |
| CAMPP25A | 25mm Polyprop Female Threaded Adaptor |
| CAMPP32A | 32mm Polyprop Female Threaded Adaptor |
| CAMPP38A | 38mm Polyprop Female Threaded Adaptor |
| CAMPP51A | 51mm Polyprop Female Threaded Adaptor |
| CAMPP64A | 64mm Polyprop Female Threaded Adaptor |
| CAMPP76A | 76mm Polyprop Female Threaded Adaptor |
| CAMPP102A | 102mm Polyprop Female Threaded Adaptor |



| | |
|---|---|
| | **Polyprop Male Threaded Coupling** |
| CAMPP25B | 25mm Polyprop Male Threaded Coupling |
| CAMPP32B | 32mm Polyprop Male Threaded Coupling |
| CAMPP38B | 38mm Polyprop Male Threaded Coupling |
| CAMPP51B | 51mm Polyprop Male Threaded Coupling |
| CAMPP64B | 64mm Polyprop Male Threaded Coupling |
| CAMPP76B | 76mm Polyprop Male Threaded Coupling |



| | |
|---|---|
| | **Polyprop Hose Shank Coupling** |
| CAMPP19C | 19mm Polyprop Hose Shank Coupling |
| CAMPP25C | 25mm Polyprop Hose Shank Coupling |
| CAMPP32C | 32mm Polyprop Hose Shank Coupling |
| CAMPP38C | 38mm Polyprop Hose Shank Coupling |
| CAMPP51C | 51mm Polyprop Hose Shank Coupling |
| CAMPP64C | 64mm Polyprop Hose Shank Coupling |
| CAMPP76C | 76mm Polyprop Hose Shank Coupling |



Polyprop camlocks are not a stock item but can be ordered in.

# CAMLOCKS, HOSECLIPS AND CLAMPS

| RXP Code | Description |
|---|---|
| | Polyprop Female Threaded Coupling |
| CAMPP19D | 19mm Polyprop Female Threaded Coupling |
| CAMPP25D | 25mm Polyprop Female Threaded Coupling |
| CAMPP32D | 32mm Polyprop Female Threaded Coupling |
| CAMPP38D | 38mm Polyprop Female Threaded Coupling |
| CAMPP51D | 51mm Polyprop Female Threaded Coupling |
| CAMPP64D | 64mm Polyprop Female Threaded Coupling |
| CAMPP76D | 76mm Polyprop Female Threaded Coupling |



| | Polyprop Hose Shank Adaptor |
|---|---|
| CAMPP19E | 19mm Polyprop Hose Shank Adaptor |
| CAMPP25E | 25mm Polyprop Hose Shank Adaptor |
| CAMPP32E | 32mm Polyprop Hose Shank Adaptor |
| CAMPP38E | 38mm Polyprop Hose Shank Adaptor |
| CAMPP51E | 51mm Polyprop Hose Shank Adaptor |
| CAMPP64E | 64mm Polyprop Hose Shank Adaptor |
| CAMPP76E | 76mm Polyprop Hose Shank Adaptor |
| CAMPP102E | 102mm Polyprop Hose Shank Adaptor |



| | Polyprop Male Threaded Adaptor |
|---|---|
| CAMPP19F | 19mm Polyprop Male Threaded Adaptor |
| CAMPP25F | 25mm Polyprop Male Threaded Adaptor |
| CAMPP32F | 32mm Polyprop Male Threaded Adaptor |
| CAMPP38F | 38mm Polyprop Male Threaded Adaptor |
| CAMPP51F | 51mm Polyprop Male Threaded Adaptor |
| CAMPP76F | 76mm Polyprop Male Threaded Adaptor |



| | Polyprop Dust Cap |
|---|---|
| CAMPP19DC | 19mm Polyprop Dust Cap |
| CAMPP25DC | 25mm Polyprop Dust Cap |
| CAMPP32DC | 32mm Polyprop Dust Cap |
| CAMPP38DC | 38mm Polyprop Dust Cap |
| CAMPP51DC | 51mm Polyprop Dust Cap |
| CAMPP76DC | 76mm Polyprop Dust Cap |



| | Polyprop Dust Plug |
|---|---|
| CAMPP19DP | 19mm Polyprop Dust Plug |
| CAMPP25DP | 25mm Polyprop Dust Plug |
| CAMPP32DP | 32mm Polyprop Dust Plug |
| CAMPP38DP | 38mm Polyprop Dust Plug |
| CAMPP51DP | 51mm Polyprop Dust Plug |
| CAMPP64DP | 64mm Polyprop Dust Plug |



# CAMLOCKS, HOSECLIPS AND CLAMPS

## Stainless Steel W3 Band Hose Clips



| RXP Code | Description | Clamping Range |
|---|---|---|
| | 7.5mm Band | |
| 10-16/7P | 10-16mm Mini Hose Clip | 10-16mm |
| | 9mm Band | |
| 8-16/9P | 8-16mm Worm Drive Hoseclip | 8-16mm |
| 12-20/9P | 12-20mm Worm Drive Hoseclip | 12-20mm |
| 16-25/9P | 16-25mm Worm Drive Hoseclip | 16-25mm |
| 20-32/9P | 20-32mm Worm Drive Hoseclip | 20-32mm |
| 25-40/9P | 25-40mm Worm Drive Hoseclip | 25-40mm |
| 30-45/9P | 30-45mm Worm Drive Hoseclip | 30-45mm |
| 32-50/9P | 32-50mm Worm Drive Hoseclip | 32-50mm |
| 40-60/9P | 40-60mm Worm Drive Hoseclip | 40-60mm |
| 50-70/9P | 50-70mm Worm Drive Hoseclip | 50-70mm |
| 70-90/9P | 70-90mm Worm Drive Hoseclip | 70-90mm |
| 80-100/9P | 80-100mm Worm Drive Hoseclip | 80-100mm |
| 90-110/9P | 90-110mm Worm Drive Hoseclip | 90-110mm |
| | 13mm Band | |
| 16-25/13P | 16-25mm Worm Drive Hoseclip | 16-25mm |
| 20-32/13P | 20-32mm Worm Drive Hoseclip | 20-32mm |
| 25-40/13P | 25-40mm Worm Drive Hoseclip | 25-40mm |
| 30-45/13P | 30-45mm Worm Drive Hoseclip | 30-45mm |
| 35-50/13P | 35-50mm Worm Drive Hoseclip | 35-50mm |
| 40-60/13P | 40-60mm Worm Drive Hoseclip | 40-60mm |
| 50-70/13P | 50-70mm Worm Drive Hoseclip | 50-70mm |
| 60-80/13P | 60-80mm Worm Drive Hoseclip | 60-80mm |
| 70-90/13P | 70-90mm Worm Drive Hoseclip | 70-90mm |
| 80-100/13P | 80-100mm Worm Drive Hoseclip | 80-100mm |
| 90-110/13P | 90-110mm Worm Drive Hoseclip | 90-110mm |
| 100-120/13P | 100-120mm Worm Drive Hoseclip | 100-120mm |

# CAMLOCKS, HOSECLIPS AND CLAMPS

## Stainless Steel W2 Band Heavy Duty Hose Clamps



| RXP Code | Clamping Range 9mm Band Width | Suitable Pipe Sizes |
|---|---|---|
| GBS18/18W2 | 17-19 mm | |
| GBS20/18W2 | 19-21 mm | |
| GBS24/18W2 | 23-25 mm | |
| GBS26/18W2 | 25-27 mm | |
| GBS28/18W2 | 27-29 mm | |
| GBS30/18W2 | 29-31 mm | |
| GBS33/18W2 | 31-34 mm | 32mm MDOD |
| GBS36/18W2 | 34-37 mm | |
| GBS39/18W2 | 37-40 mm | 32mm LD/MDID |
| GBS42/18W2 | 40-43 mm | 40mm MDOD |
| GBS45/20W2 | 43-47 mm | 40mm LD/MDID |
| GBS49/20W2 | 47-51 mm | 50mm MDOD |
| GBS53/20W2 | 51-55 mm | |
| GBS57/20W2 | 55-59 mm | 50mm LD |
| GBS61/20W2 | 59-63 mm | 50mm MDID |
| GBS66/20W2 | 63-68 mm | 63mm MDOD |
| GBS71/25W2 | 68-73 mm | |
| GBS76/25W2 | 73-79 mm | 75mm MDOD |
| GBS82/25W2 | 79-85 mm | |
| GBS88/25W2 | 85-91 mm | 90mm MDOD |
| GBS94/25W2 | 91-97 mm | |
| GBS108/25W2 | 104-112 mm | 110mm MDOD |
| GBS117/25W2 | 112-121 mm | |
| GBS126/25W2 | 121-130 mm | |
| GBS135/30W2 | 130-140 mm | |
| GBS145/30W2 | 140-150 mm | |
| GBS156/30W2 | 150-162 mm | |
| GBS168/30W2 | 162-174 mm | |
| GBS181/30W2 | 174-187 mm | |
| GBS194/30W2 | 187-200 mm | |

# TANKS & TROUGHS

## Consider your on-farm water storage solution sorted with our range of tanks and troughs.



## A wide range of sizes and colours, there's a tank to suit every situation and location.

- From 500L to 30,000L
- AS/NZS 4766:2006 compliant
- Easy to install
- UV stabilised, food grade polyethylene
- One piece construction for strong robust tanks
- Wide range of accessories including firefighting kits
- 20 Year warranty

### Standard tank colours

Mist Green | Heritage Green | Beige | Black | Karaka Green | Dark Grey | Light Grey

Other colours available on request.
*Colours are an indication only**



## Trust our troughs, they are a long-lasting choice for storing and supplying stock water.

- From 12L to 1200L
- Range of sizes to suit all situations
- Easy to handle and move
- Made for the harshest conditions

# TANKS AND TROUGHS

## MAX™ Tanks: 10,000 - 30,000 Litre Tanks

- For water use only 1 SG (1m³ = 1000kgs water).
- For potable water storage between 1-23°C.
- Supplied with a black vented lid, 450mm for 10,000 and 15,000 litre tanks. 600mm for 25,000, 26,000 and 30,000 litre tanks
- Lifting lugs - 4 for 10,000 litre tank. 6 for 15,000, 25,000, 26,000 and 30,000.
- Standard Colours:- Black (B), Mist Green (MG), Heritage Green (HG), Karaka Green (KG), Beige (BE), Dark Grey (DG) and Light Grey (LG).
- Other colours are available on request but may incur additional charges.
- Code examples:- RX30000LB (Black), RX30000LMG (Mist Green), RX30000LHG (Heritage Green), RX30000LKG (Karaka Green), RX30000LBE (Beige), RX30000LDG (Dark Grey). Please state colour on your order.

| RXP Code | Description |
|---|---|
| RX10000LB | 10000 Litre Water Tank - **North Island only** |
| RX15000LB | 15000 Litre Water Tank - **North and South Island** |
| RX25000LB | 25000 Litre Water Tank - **North Island only** |
| RX26000LB | 26000 Litre Water Tank - **South Island only** |
| RX30000LB | 30000 Litre Water Tank - **North and South Island** |

MAXTanks have one threaded outlet supplied with a 50mm male threaded tank inlet (RXTTI50), a 50mm male/ female 90 degree threaded elbow (RXTMFE50) and a 50mm cap and washer (RXC/W50).










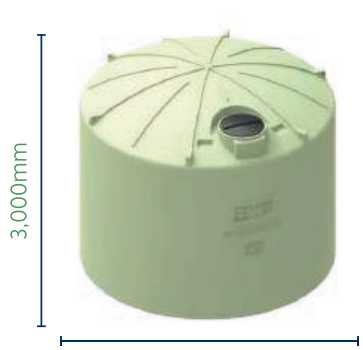




# TANKS AND TROUGHS

## Water Tanks: 500 - 7,500 Litre Tanks

- For potable water storage between 1-23°C.
- Supplied with a lid for 400mm manhole.
- Black (B) and Mist Green (MG) are stock items.
- Beige (BE) and Heritage Green (HG) are made on request.
- Other colours are available on request but may incur additional charges.
- Code examples:- RX500LB (Black), RX500LMG (Mist Green), RX500LBE (Beige), RX500LHG (Heritage Green). Please state colour on your order.

| RXP Code | Description |
|---|---|
| RX500L | 500 Litre Water Tank |
| RX1100L | 1100 Litre Water Tank |
| RX2000L | 2000 Litre Water Tank |
| RX3200L | 3200 Litre Water Tank |
| | RXTTI25 and RXHP25 are included with the tanks |
| | |
| RX5250L | 5250 Litre Tank |
| RX7500L | 7500 Litre Tank |
| | RXTTI50 and RXHP50 are included with the tanks |



500 Litres
Weight 20kg

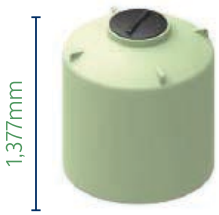

1,100 Litres
Weight 35kg



2,000 Litres
Weight 50kg



3,200 Litres
Weight 75kg



5,250 Litres
Weight 117kg

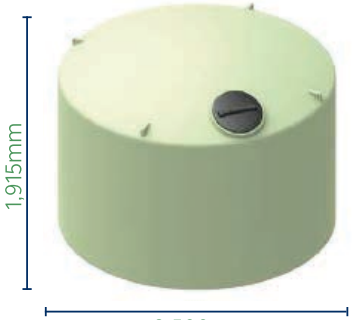

7,500 Litres
Weight 152kg

# TANKS AND TROUGHS

## Colostrum Tanks

- Made from strong robust opaque plastic.
- Clearly marked with stencil showing the volume in litres.
- 400mm inspection hole and lid.
- Supplied with 32mm (1¼") tank inlet male -RXTTI32.
- UV stabilised.

| RXP Code | Description |
|---|---|
| RX500LCO | 500 Litre Colostrum Tank |
| RX1100LCO | 1100 Litre Colostrum Tank |
| RX2000LCO | 2000 Litre Colostrum Tank |
| RX3200LCO | 3200 Litre Colostrum Tank |
| RX5250LCO | 5250 Litre Colostrum Tank |
| RX7500LCO | 7500 Litre Colostrum Tank |



## Foamed Tanks

- Offers extra stiffness.
- Superior insulation properties while keeping temperatures constant.
- 400mm inspection hole and screw in lid.
- UV stabilised.

| | |
|---|---|
| RX500LF | 500 Litre Foamed Tank |
| RX1100LF | 1100 Litre Foamed Tank |
| RX2000LF | 2000 Litre Foamed Tank |
| RX3200LF | 3200 Litre Foamed Tank |
| RX5250LF | 5250 Litre Foamed Tank |
| RX7500LF | 7500 Litre Foamed Tank |




## Molasses Tanks

- Specially made extra heavy duty tanks for storage of heavy molasses or similar liquids. (1 litre = 1.2kg)
- 400mm inspection hole for 500- 15,000 litre tanks.
- 600mm inspection hole for 25,000 - 30,000 litre tanks.
- UV stabilised.

| | |
|---|---|
| RX500LM | 500 Litre Molasses Tank |
| RX1100LM | 1100 Litre Molasses Tank |
| RX2000LM | 2000 Litre Molasses Tank |
| RX3200LM | 3200 Litre Molasses Tank |
| RX5250LM | 5250 Litre Molasses Tank |
| RX7500LM | 7500 Litre Molasses Tank |
| RX15000LBM.21T | 15000 Litre Molasses Tank - 21 Tonne |
| RX25000LM.B.30T | 25000 Litre Molasses Tank - 30 Tonne - **North Island only** |
| RX26000LM.B.30T | 26000 Litre Molasses Tank - 30 Tonne - **South Island only** |
| RX30000LBM.40T | 30000 Litre Molasses Tank - 40 Tonne |



## Metro Tanks - Urban Water Storage

- Diameter: 1050mm Height: 2145mm

| | |
|---|---|
| METRO1670LLG | 1670 Litre Metro Tank Light Grey - **North Island Only** |
| METRO3340LLG | 3340 Litre Metro Tank Light Grey - **North Island Only** |
| METRO5010LLG | 5010 Litre Metro Tank Light Grey - **North Island Only** |
| METRO1670LME | 1670 Litre Metro Tank Merino - **North Island Only** |
| METRO3340LME | 3340 Litre Metro Tank Merino - **North Island Only** |
| METRO5010LME | 5010 Litre Metro Tank Merino - **North Island Only** |



# TANKS AND TROUGHS

## Tank Accessories

| RXP Code | Description |
|---|---|
| | Molasses Kit |
| RXMK-LGE | Large Molasses Kit |
| RXMK-SM | Small Molasses Kit |

| | Tank Lids |
|---|---|
| TANKLIDAG450 | Arag Lid 450mm screw in vented lid, rivatable rim or thread fits tanks 500 - 15,000 litres, black only |
| TANKLIDAG620 | RX Tank Lid 620mm screw in vented lid, rivatable rim or thread fits tanks 25,000 - 30,000 litres, black only |
| TANKLIDSK350 | Skellerup Tank 350mm fits all Skellerup tanks up to 30,000 litres 675 litre header tank (RXHT.675) also used for spare lids for casing casks and bulkie barrels |



| | Suitable for potable water |
|---|---|
| BTF75 | 75mm Brass Tank Fitting - Tapered Thread |
| BTF100 | 100mm Brass Tank Fitting - Parallel Thread |



## Tank Fittings

| RXP Code | Description |
|---|---|
| | Water Inlet System |
| RXTKPIK25 | 25mm Protected Inlet Kit |
| RXTKPIK50 | 50mm Protected Inlet Kit |




RXTKPIK

# TANKS AND TROUGHS

## Tank Fittings

| RXP Code | Description |
|---|---|
| | Water Outlet System |
| RXTKOK25 | 25mm Outlet Kit |
| RXTKOK50 | 50mm Outlet Kit |
| RXTKOK75 | 75mm Outlet Kit |
| RXTKRFMK25 | 25mm Rising Falling Main Kit |
| RXTKRFMK50 | 50mm Rising Falling Main Kit |
| RXTKFOK32 | 32mm Floating Outlet |
| RXTKRDOK25 | 25mm Reserve Dual Outlet Kit |
| RXTKRDOK50 | 50mm Reserve Dual Outlet Kit |
| RXPTF80 | 80mm Plastic Tank Fitting |
| RXPTF100 | 100mm Plastic Tank Fitting |





RXTKOK50



RXTKOK75



RXTKRFMK



RXTKFOK32



RXTKRDOK

# TANKS AND TROUGHS

## Tank Fittings and Firefighting Packages

| RXP Code | Description |
|---|---|
| | **Tank Overflow Kit** |
| RXTKOVK50 | 50mm Tank Overflow Kit |
| RXTKOVK100 | 100mm Tank Overflow Kit |

| | **Tank Connection Kit** |
|---|---|
| RXTKCK50 | 50mm Dual Tank Connection Kit |
| RXTKCK100 | 100mm Dual Tank Connection Kit |



RXTKOVK




RXTKCK50

**Firefighting**

Suitable for 15,000, 25,000, 26,000 and 30,000 litre MAX tanks. 100mm firefighting outlet (RXTKFFK100) fits 100mm firefighting coupling.

Requires supporting separately from the RXP tank wall.

| | |
|---|---|
| RXTKFFK100 | 100mm Firefighting Kit |
| RXTKCK100 | 100mm Dual Tank Connection Kit |
| RXTKWRK45000L.25 | 45000L Water Reserve Kit |



RXTKFFK100




RXTKCK100




RXTKWRK45000L.25

# TANKS AND TROUGHS

## Tank Vents and Water Level Indicators

| RXP Code | Description |
|---|---|
| | **Tank Vent** |
| RXTKVENT50 | 50mm Tank Vent |
| RXTKVENT100 | 100mm Tank Vent |
| TANKVENT.100 | 100mm Tank Vent - with riser and uniseal |

| | |
|---|---|
| | **Filter Basket** |
| FILTERBSKT | Filter Basket for tank lids - fits inside Arag Lid 450mm only |



| | |
|---|---|
| | **Water Level Indicator** |
| RXTKWLI | RX Water Level Indicator |
| VVSE/JRW | Water Level Indicator |



RXTKVENT.50



RXTKVENT.100



RXTKWLI

# TANKS AND TROUGHS

## Super Troughs

- The RXP Super Trough comes standard with a 20mm long thread full flow (PH.VERSA.FV20LSA) float valve complete with backnut, ballfloat.
- The 300 litre trough upwards also come with a RXHP40 and RXTTI40.
- This full flow valve is rated to a maximum of 80psi - 160 L/per minute.

| RXP Code | Description |
|---|---|
| RXTR200LRDB | 200 Litre Black Round Trough<br>1180mm x 390mm deep |
| RXTR500LRDB | 500 Litre Black Round Trough<br>1620mm x 420mm deep |
| RXTR1200LRB | 1200 Litre Black Round Trough<br>2130mm x 580mm |



| | |
|---|---|
| RXTR100LRTB | 100 Litre Black Rectangular Trough<br>1160mm x 620mm x 300mm deep |
| RXTR300LRTB | 300 Litre Black Rectangular Trough<br>1620mm x 880mm x 410mm deep |
| RXTR350LRTB | 350 Litre Black Between Fence Trough<br>1935mm x 1100mm x 380mm deep |



| | |
|---|---|
| RXTCG | RX Trough Cover Green |



## Standard Troughs

| | Fence Hung Trough |
|---|---|
| RXTR12L | 12 Litre Fence Hung Trough - Black<br>385mm (l) x 340mm (w) x 320mm (h)<br>supplied with a bung and ballcock |
| RXTR25L | 25 Litre Fence Hung Trough - Black<br>500mm (l) x 375mm (w) x 400mm (h)<br>supplied with a bung and ballcock |



| | Drag Trough |
|---|---|
| RXTR180L | 180 Litre Drag Trough - Black<br>850mm (w) x 550mm (h) |



This trough takes 50 metres of 20mm flexible suction pipe 105 psi working pressure, 320 psi burst pressure. Pipe not supplied

| | |
|---|---|
| RXTR180L.COMP | 180Litre Drag Trough with pipe and fittings<br>850mm (w) x 550mm (h). |



Supplied with pipe and fittings required for installation

| | |
|---|---|
| FLEXICON.20.330 | 20mm Flexible hose connector for 180 Litre Drag Trough |



| | Break-Feed Troughs |
|---|---|
| RXTR200LBF | RX 200LT Break-Feed Trough |
| RXFVSK20 | 20mm Float Valve Support Kit |





# TANKS AND TROUGHS

## K-Troughs

| RXP Code | Description |
|---|---|
| RXTR75L | RXP 75 Litre K-Trough - Black |
| RXTR150L | RXP 150 Litre K-Trough - Black |



## Nura / Header Tanks

| | |
|---|---|
| RXHT.135COMP | 135 Litre Nura Header Tank Complete<br>674mm top, 572mm base x 470mm high<br>comes complete with all fittings required. |
| RXHT.135SEMI | 135 Litre Nura Header Tank Semi Complete<br>674mm top, 572mm base x 470mm high<br>Trough valve and ballfloat not included. |
| RXHT.135TKLID | 135 Litre Nura Header Tank and Lid With Kit - Black<br>674mm top, 572mm base x 470mm high<br>Trough Valve, Ballfloat, Tray and Overflow not included |



| | |
|---|---|
| RX135L.BP | RX Header Tank 135 Litre - Aluminium Backing Plate |
| RX135L.OF.V2 | RX Header Tank 135 Litre - Overflow Version 2 |
| RX135L.TANK | RX Header Tank 135 Litre - Tank & Lid |
| RX135L.TRAY | RX Header Tank 135 Litre - Tray |
| BTF20 | 20mm Brass Tank Fitting |
| POLYW20 | 20mm Poly Washer |

Replacement lids are not available.



| | |
|---|---|
| RXHT.320 | 320 Litre Nura/Header Tank - Black<br>864mm top x 674mm base, 877mm high |
| RXHT.675 | 675 Litre Nura/Header Tank - Black<br>1290mm top x 1290mm base, 580mm high |

| | |
|---|---|
| RX422LB | 422 Litre Open Top Tank - Black<br>980mm (h) x 825mm (d) |
| RX1818LB | 1818 Litre Open Top Tank - Black<br>1240mm (h) x 1500mm (d) |



## Grey Water Tank and Pump Cover

| | |
|---|---|
| RX600LB | 600 Litre Grey Water Tank<br>2000mm (l) x 600mm (w) x 600mm (w) |
| RXPUMPC-BK | Plastic Pump Cover<br>620mm (h) x 520mm (w) x 800mm (l)<br>Available in black (BK), Beige (BE), Mist Green (MG) and White (WH) |





# SEPTIC TANKS

## Environmental Septic Tank Range

| RXP Code | Description |
|---|---|
| RXST33 | 3300 Litre Single Stage Filtered Septic Tank |
| Evacuation Hole Size: 3000L x 3000W x 2250D, Weight: 200kg, Working Volume: 3300L | |
| RXST3310 | 4300 Litre Single Stage Filtered Septic Tank and Pump Chamber |
| Evacuation Hole Size: 4000L x 3000W x 2250D, Weight: 300kg, Working Volume: 4300L | |
| RXST3315 | 4800 Litre 2 Stage Filtered Septic Tank |
| Evacuation Hole Size: 4000L x 3000W x 2250D, Weight: 315kg, Working Volume: 4800L | |
| RXST331210 | 5500 Litre 2 Stage Filtered Septic Tank and Pump Chamber |
| Evacuation Hole Size: 4000L x 3100W x 2250D, Weight: 375kg, Working Volume: 5500L | |
| RXST.DP15SET | D15V Drainage Pump Set, fitted into Septic Tank. Price includes pump, pipework and installation |
| RXST.PCALARM | DLM Alarm for Pump Chamber |
| RXST.FS | AirTech® Float Switch |
| RXST.PUMP | D42A/B Pump - For AT7000 and AT9000 |
| RXST.BLOWERJDK | JDK AirTech Blower - for AT7000 and AT9000 |











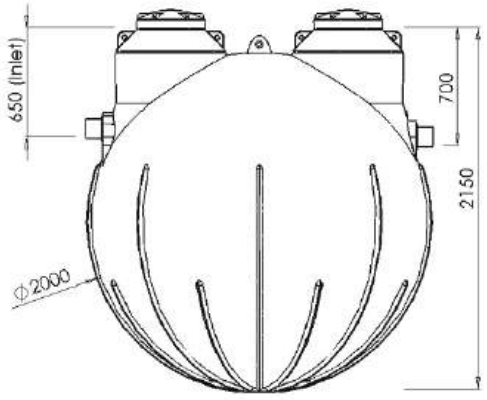


RXST33

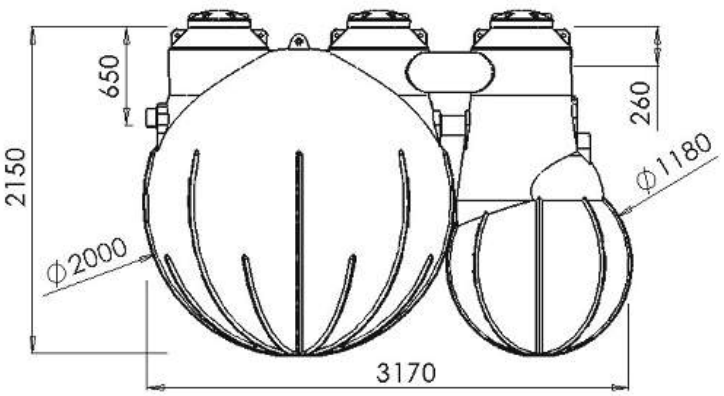


RXST3310

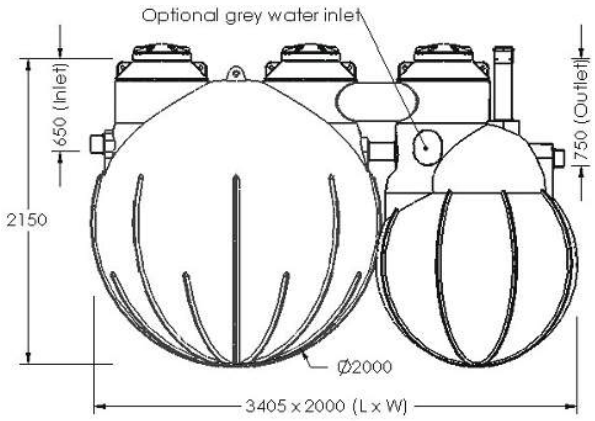


RXST3315

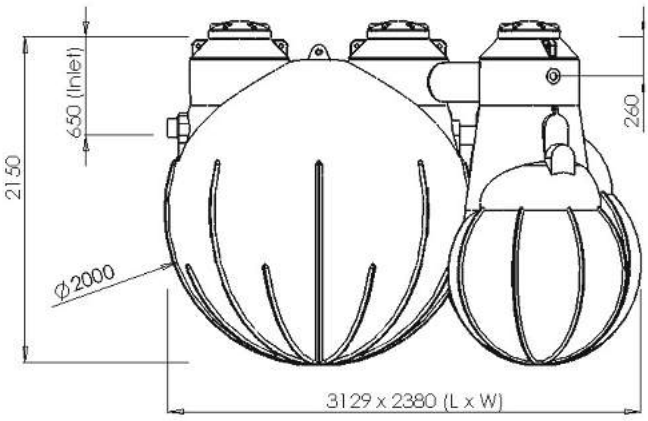


RXST331210

# SEPTIC TANKS

## Environmental Pump Chambers

- Pumps are NOT supplied.
- Suitable for underground retention/detentions tanks.
- All Pump Chambers use a RXTTI25 outlet.
- No Bioceptor.

| RXP Code | Description |
|---|---|
| RXSTPC10 | 1210 Litre Pump Chamber |
| Evacuation Hole Size: 2000L x 2000W x 2250D, Working Volume: 1200L | |
| RXSTPC12 | 1400 Litre Pump Chamber |
| Evacuation Hole Size: 2000L x 2000W x 2250D, Working Volume: 1400L | |
| RXSTPC15 | 1600 Litre Pump Chamber |
| Evacuation Hole Size: 2000L x 2000W x 2250D, Working Volume: 1600L | |
| RXSTPC33 | 4000 Litre Pump Chamber |
| Evacuation Hole Size: 3000L x 3000W x 2250D, Working Volume: 4000L | |

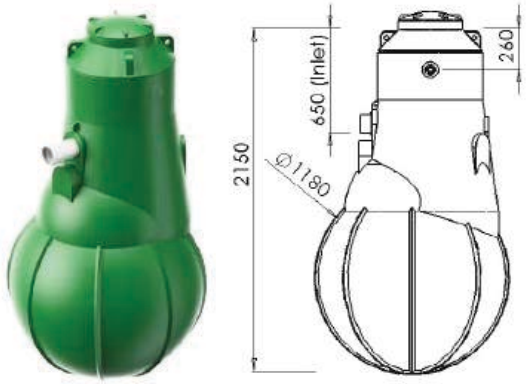


RXSTPC10

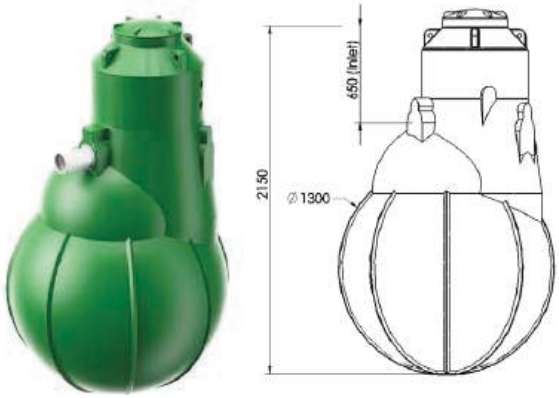


RXSTPC12

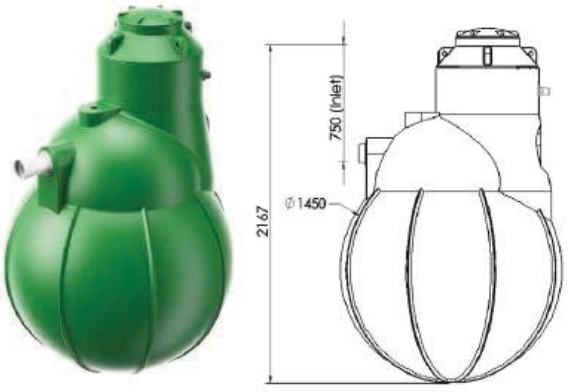


RXSTPC15

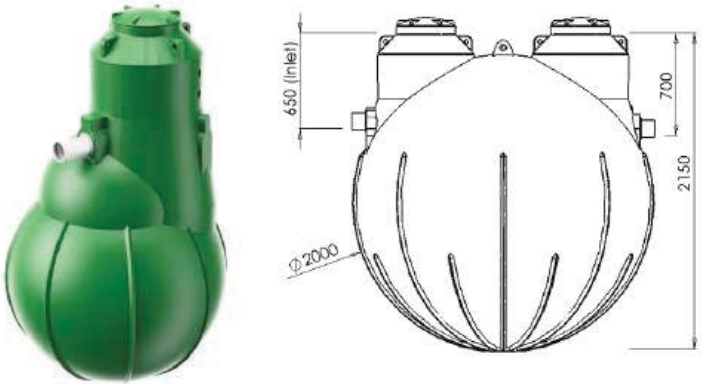


RXSTPC33

# SEPTIC TANKS

## Environmental Pump Chambers
## - complete with high water alarm and pump

| RXP Code | Description |
|---|---|
| RXSTPC10.120GA | 1200 Litre Pump Chamber complete with pump controller, high water alarm and grinder pump |
| Evacuation Hole Size: 2000L x 2000W x 2250D | |

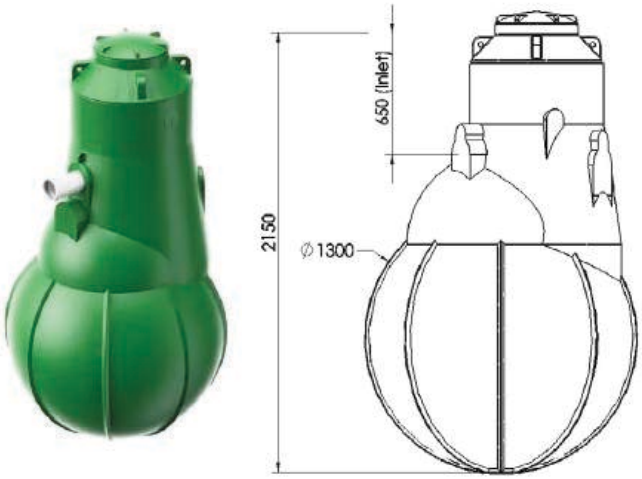


RXSTPC10.120GA

# SEPTIC TANKS

## AirTech® - On-Site Wastewater Treatment System

The AirTech® system is an efficient, lightweight sewage treatment plant that safely and effectively processes your disposables and wastewater. The unit recycles it as clear, odourless nutrient enriched water, that can be safely discharged into a field.

For the environmentally minded this means that the sewage and waste water is treated on the property where it is produced and then recycled for reuse with little or no environmental impact on the land.

The AirTech® system comes in three choices depending on your requirements. Whether you have a small residential home (AT7000) or a larger residential home (AT9000), RXP may be able to assist you.

Please call RXP and we can refer you to our extensive installer network or if you wish to become an installer we can talk about the requirements.

NOTE: Not all household waste streams should go to the AirTech® system. Please refer to the Home Owner's Manual.

AirTech® 7000
Total 1500 litres per day.
System ideal for houses
and baches up to 5 people.



AirTech® 9000
Total 2000 litres per day.
System ideal for houses
with up to 10 people.



| RXP Code | Description |
|---|---|
| RXSTAT331210 | AirTech® 7000 with Filter Kit, with 2 x 100m dripline |
| Evacuation Hole Size - 4000 L x 3100 W x 2250 D | |
| RXSTAT7000M | AirTech® 7000 without pump, filter kit and dripline |
| Evacuation Hole Size - 4000 L x 3100 W x 2250 D | |
| RXSTAT33151210 | AirTech® 9000 with Filter Kit, with 300m dripline |
| Evacuation Hole Size - 5000 L x 3100 W x 2250 D | |
| RXSTAT9000M | AirTech® 9000 without pump, filter kit and dripline |
| Evacuation Hole Size - 5000 L x 3100 W x 2250 D | |

K-LINE®
SYSTEMS





## K-LINE® BENEFITS

### Suitable for irrigation, effluent, orchard, landscape and dust suppression needs.

- Economical – more cost effective both in start-up cost and operating costs than other irrigation systems.
- Multi terrain – if you can safely shift the K-Line you can irrigate.
- Durable – built to withstand UV light, freezing temperatures and vehicle and animal traffic.
- Movable – easily shifted from irrigation set to irrigation set.
- Scalable – the system is designed to expand as needs grow. Mix and match K-LINE® packs to irrigate 0.5 to 1000 hectares.
- Animal friendly – safe to use around grazing animals.
- Adaptable – from application rates to field shape, K-LINE® can be adjusted to meet your needs.

## K-LINE® FARM PACKS

### Suitable for a lifestyle block or small farm irrigation system.

- Including the above statements:
- This pack will provide all you need to irrigate your areas.
- The pack has the fittings we think you require, tools that are more difficult to obtain and make it easy for you to install. A DIY joy!



## Lifestyle, Farm, Extension and Dust Suppression Packs

| RXP Code | Description |
|---|---|
| | **Lifestyle Packs - with Naan 427** |
| KL1POD | K-Line® One Pod Pack |
| Complete with Naan427 Sprinkler, Blue K-Line® Std Pod x 1, ready for garden hose connection | |
| KL1PODPACK | K-Line® One Pod Pack |
| Complete with Naan427 Sprinkler, Blue K-Line® Std Pod x 1, 16mm tubing x 35metres and fittings | |
| KLSS32.3PODDIY | DIY 3 Pod Pack |
| 32mm K-Pipe x 66metres, Blue K-Line® Std Pods x 3, complete with Naan427 sprinklers and fittings | |
| | **Farm Packs - with Naan 5022** |
| KLSS32.3PODPACK | 32mm K-Line® 3 Pod Farm Pack |
| 32mm K-Pipe x 66metres, Black K-Line® Std Pods x 3 complete, with Pack | |
| KLSS32.4PODPACK | 32mm K-Line® 4 Pod Farm Pack |
| 32mm K-Pipe x 76metres, Black K-Line® Std Pods x 4 complete with Pack | |
| KLSS32.5PODPACK | 32mm K-Line® 5 Pod Farm Pack |
| 32mm K-Pipe x 115metres, Black K-Line® Std Pods x 5 complete with Pack | |
| | **Extension Packs - with Naan 5022** |
| KLSS40.5PODPACK | 40mm K-Line® 5 Pod / Extension Pack |
| 40mm K-Pipe x 104metres, Black K-Line® Std Pods x 5, complete. Plus 40mm Pack and KLTPS32 x 3 | |
| | **Dust Suppression Pack** |
| KLSS32.3DUST | 32mm K-Line® 3 Pod Dust Suppression Pack |
| 32mm K-Pipe x 66metres, Orange K-Line®TM Std Pods x 3, complete with adaptor and coupler camlocked for easy installation | |










## Farm Pack Components

Standard components in every pack
3 Pod pack = 3 x value shown
4 Pod pack = 4 x value shown
5 Pod pack = 5 x value shown

1
- Sprinkler with Red Nozzle (1) NAAN5022SD-RED
- Black & Orange Nozzles* (1 each) NOZZ5022-BLK NOZZ5022-ORG *Alternative nozzles for sprinklers
- Sprinkler Adaptor (1) NAAN-ADAPTOR
- Brass Nuts (2) KLSP-BRASS NUT

Standard components in every pack - one of each supplied only

2
- 14mm Spade bit w/limiter x 13mm Hex (1) KLTL14.DRILL
- Drill head Adaptor ⅜" **drive** x drive head (1) KLTL.DRIVE.ADAP
- Thread Tape (1) CT
- 13mm metric deep socket x ⅜" **(1)** KLTL.3.8.13SOCKET
- Rope **(2 m.)** KL-ROPE
- Installation USB **(1)** USB.KLFPACK

Standard components for Farmpacks with 32mm pipe

3a
- 32mm Tapping Saddle (5) KLTPS32
- Hex Nipple (1) RXHN32
- Straight Coupling (1) KLSC32
- Female Threaded Adaptor (1) CAM32A
- Male Coupling (3) KLMC32
- Tow Cap (1) RXTC32
- Female Threaded Coupling (1) CAM32D

Standard components for 40mm extension Farmpack

3b
- 40mm Tapping Saddle (5) KLTPS40
- 32mm Tapping Saddle (3) KLTPS32
- Hex Nipple (1) RXHN40
- Straight Coupling (1) KLSC40
- Female Threaded Adaaptor (1) CAM38A
- Reducing Coupling (1) KLRC4032
- Male Coupling (2) KLMC40
- Tow Cap (1) RXTC40
- Female Threaded Coupling (1) CAM38D

# K-LINE® SYSTEMS

## Standard Pod Options

| RXP Code | Description |
|---|---|
| KLSS32.NAAN.xxx | 32mm K-Line® Naan Irrigation Sprinkler Skid Complete |
| KLSS40.NAAN.xxx | 40mm K-Line® Naan Irrigation/Effluent Sprinkler Skid Complete |
| KLSS45.NAAN.xxx | 45mm K-Line® Naan Irrigation/Effluent Sprinkler Skid Complete |

**xxx Nozzle choices = red (red 3.00mm) standard eg. KLSS40.NAAN.RED**

pur (purple 2.5mm) org (orange 2.85mm)
grn (green 3.2mm) blue (blue 3.5mm) blk (black 4.0mm)

Components


NAAN5022SD-xxx


UBSS32/40
KLSP-BRASS NUT


KLTPS
NOTE: 14mm drill size


NAAN-ADAPTOR


KLSTD.POD

| | |
|---|---|
| KLSS32.NEL.xxx.xxx | 32mm K-Line® Nelson Irrigation Sprinkler Skid Complete |
| KLSS40.NEL.xxx.xxx | 40mm K-Line® Nelson Irrigation Sprinkler Skid Complete |
| KLSS45.NEL.xxx.xxx | 45mm K-Line® Nelson Irrigation Sprinkler Skid Complete |

**xxx.xxx choices (Plate.nozzle) = red.red (WF16 x #16 ) standard eg. KLSS32.NEL.RED.RED**

grn.grn (WF14 x #14) red.tan (WF16 x #15) gld.gld (WF18 x #18) brn.brn (WF20 x #20)

Components


NEL-R2000WF-xxx/xxx


UBSS32/40
KLSP-BRASS NUT


KLTPS
NOTE: 14mm drill size


NELSON-ADAPTOR


KLSTD.POD

| | |
|---|---|
| KLSS32.NREG.##.xxx.xxx | 32mm K-Line® Nelson Irrigation Sprinkler Skid Complete |
| KLSS40.NREG.##.xxx.xxx | 40mm K-Line® Nelson Irrigation Sprinkler Skid Complete |
| KLSS45.NREG.##.xxx.xxx | 45mm K-Line® Nelson Irrigation Sprinkler Skid Complete |

**## choices (Regulator) =** **50 (50psi) standard** **eg KLSS40.NREG.50.RED.RED**
45 (45psi)
40 (40psi)

**xxx.xxx choices (Plate.nozzle) = red.red (WF16 x #16 ) standard**

grn.grn (WF14 x #14) red.tan (WF16 x #15) gld.gld (WF18 x #18) brn.brn (WF20 x #20)

Components


NEL-R2000WF-xxx/xxx


UBSS32/40
KLSP-BRASS NUT


KLTPS
NOTE: 14mm drill size


NEL-MR ##PSI MINIREG


NELSON-NIPPLE


KLSTD.POD

| | |
|---|---|
| KLSS32.NELR33.xxx.xxx | 32mm K-Line® Nelson Irrigation Sprinkler Skid Complete |
| KLSS40.NELR33.xxx.xxx | 40mm K-Line® Nelson Irrigation Sprinkler Skid Complete |
| KLSS45.NELR33.xxx.xxx | 45mm K-Line® Nelson Irrigation Sprinkler Skid Complete |

**xxx.xxx choices (Plate.nozzle) = gry.#22 (grey 22 x 4.4mm ) standard**
**eg. KLSS40.NELR33.GRY.#22**

gld.#18 (gold 18 x 3.6mm) brn.#20 (brown 20 x 4.00mm) grn.#24 (green 24 x 4.8mm)

Components


NELSON-R33-xxx/xxx


UBSS32/40
KLSP-BRASS NUT


KLTPS
NOTE: 14mm drill size


NELR33ADAPTOR


KLSTD.POD

# K-LINE® SYSTEMS

## Standard Pod Options

| RXP Code | Description |
|---|---|
| KLSS32.NEL9D.xxx.xxx | 32mm K-Line® Low Angle Orchard Sprinkler Skid Complete |
| KLSS40.NEL9D.xxx.xxx | 40mm K-Line® Low Angle Orchard Sprinkler Skid Complete |
| KLSS45.NEL9D.xxx.xxx | 45mm K-Line® Low Angle Orchard Sprinkler Skid Complete |

**xxx.xxx choices (Plate.nozzle) = pur.grn (K4 Purple x #14 Green) standard**
**eg. KLSS32.NEL9D.PUR.GRN**
pur.yel (K4 Purple x #13) org.tan (K5 Orange x #15Tan) org.red (K5 Orange x #16 Dark Red)

Components


NEL_R2000D-xxx/xxx


UBSS32/40
KLSP-BRASS NUT


KLTPS
NOTE: 14mm drill size


KLPU15


KLSTD.POD

**Concept -** The K-Line® 15mm pop-up allows the use of 9° low angle sprinklers in the pod. These are Nelson R2000 sprinklers that have flow rates between 400 and 800 litres per hour.


K-Line® Nelson R2000 9° low trajectory sprinkler, sitting below the top of the K-Line® pod while non-operational.


K-Line® Nelson R2000 9° low trajectory sprinkler, sitting above the top of the K-Line® pod while operational.

| | |
|---|---|
| KLRS40.R33.xx.xx.1 | 40mm K-Line® Nelson Sprinkler Riser Complete - 1 metre |
| KLRS45.R33.xx.xx.1 | 45mm K-Line® Nelson Sprinkler Riser Complete - 1 metre |

**xx.xx choices (Plate.nozzle) = gy.22 (grey 22 x 4.4mm ) standard**
**eg. KLRS40.R33.GY.22.1**
gl.18 (gold 18 x 3.6mm) br.20 (brown 20 x 4.00mm) gr.24 (green 24 x 4.8mm)

Components


NELSON-R33-xxx/xxx


UBSS32/40
KLSP-BRASS NUT


KLTPS
NOTE: 14mm drill size


KLSG.STD


RXRHN2515


RXRHS2515


AQLFC25 X 2


KLSTD.POD



**Concept -** The K-Line® 1 metre riser allows the use of the K-Line in tall crops. The use of the K-Line Karousel® will allow the pod line to be moved around 90° and two of these units through 180°. The sprinklers are Nelson R33 sprinklers that have flow rates between 800 and 1800 litres per hour and spacings that would be up to 18m x 18m spacings.

# K-LINE® SYSTEMS

## Mid Pod Options

| RXP Code | Description |
|---|---|
| KLMID32.NAAN5035.xxx | 32mm K-Line® Mid Naan Irrigation 5035 Skid Complete |
| KLMID40.NAAN5035.xxx | 40mm K-Line® Mid Naan Irrigation 5035 Skid Complete |
| KLMID45.NAAN5035.xxx | 45mm K-Line® Mid Naan Irrigation 5035 Skid Complete |

**xxx Nozzle choices = red (red 6.00mm) standard eg. KLMID40.NAAN5035.RED**

blue (blue 3.5mm) blk (black 4.0mm) brn (brown 4.5mm)
pur(purple 5.0mm) org (orange 5.5mm) grey (grey 6.5mm) grn (green 7.0mm)



Components


NAAN5035SD-xxx


UBSS32/40
KLSP-BRASS NUT


KLTPS
NOTE: 14mm drill size


MID-ADAPTOR


KLMID.POD

| KLMID40.ISEN50.xxx | 40mm K-Line® Mid Irrigation Senninger 5023 Skid |
|---|---|
| KLMID45.ISEN50.xxx | 45mm K-Line® Mid Irrigation Senninger 5023 Skid |

**xxx Nozzle choices = #16 (orange 6.35mm) standard eg. KLMID40.ISEN50.#16**

#13 (white 5.16mm) #14 (blue 5.56mm)
#15 (dark brown 5.95mm) #17 (dark green 6.75mm) #18 (purple 7.14mm)



Components


ISEN5035.xxx


UBSS32/40
KLSP-BRASS NUT


KLTPS
NOTE: 14mm drill size


MID-ADAPTOR


KLMID.POD

| KLMID25.NAAN5035.xxx | 25mm K-Line® Mid Naan 5035 Skid Complete |
|---|---|

**xxx Nozzle choices = red (red 6.00mm) standard eg. KLMID25.NAAN5035.RED**

blue (blue 3.5mm) blk (black 4.0mm) brn (brown 4.5mm)
pur(purple 5.0mm) org (orange 5.5mm) grey (grey 6.5mm) grn (green 7.0mm)

**K-LINE MID - (LONG LATERAL)**





KLMID.POD

| KLMID25.KIT | 25mm K-Line® Mid Single Sprinkler Kit |
|---|---|



# K-LINE® SYSTEMS

## Mid Pod Options

| RXP Code | Description |
|---|---|
| KLMID40.SEN50.xxx | 40mm K-Line® Mid Effluent Senninger 5023 Skid |
| KLMID45.SEN50.xxx | 45mm K-Line® Mid Effluent Senninger 5023 Skid |

**xxx Nozzle choices = #16 (orange 6.35mm) standard eg. KLMID40.SEN50.#16**

#13 (white 5.16mm) #14 (blue 5.56mm)
#15 (dark brown 5.95mm) #17 (dark green 6.75mm) #18 (purple 7.14mm)

Components


SEN5035.xxx


UBSS32/40
KLSP-BRASS NUT


KLTPS
NOTE: 14mm drill size


MID-ADAPTOR


KLMID.POD



| | |
|---|---|
| KLRMID40.R33.xx.xx.2 | 40mm K-Line® Nelson Sprinkler Riser Complete - 2 metre |
| KLRMID45.R33.xx.xx.2 | 45mm K-Line® Nelson Sprinkler Riser Complete - 2 metre |

**xx.xx choices (Plate.nozzle) = gy.22 (grey 22 x 4.4mm ) standard**
**eg. KLRMID40.R33.GY.22.2**

gl.18 (gold 18 x 3.6mm) br.20 (brown 20 x 4.00mm) gr.24 (green 24 x 4.8mm)

Components


NELSON-R33-xxx/xxx


UBSS32/40
KLSP-BRASS NUT


KLTPS
NOTE: 14mm drill size


KLSG.MID


KLR.2




RXRHN2515


RXRHS2515


AQLFC25 X 2


KLMID.POD

**Concept -** The K-Line® 2 metre riser allows the use of the K-Line® in tall crops. The use of the K-Line Karousel® will allow the pod line to be moved around 90° and two of these units through 180°. The sprinklers are Nelson R33 sprinklers that have flow rates between 800 and 1800 litres per hour and spacings that would be up to 18m x 18m spacings.

# K-LINE® SYSTEMS

## Max Pod Options

| RXP Code | Description |
|---|---|
| KLMAX63.ISEN70.xxx | 63mm K-Line® Max[70] Irrigation Senninger 7025 Skid |
| KLMAX63SEN70xxx | 63mm K-Line® Max[70] Effluent Senninger 7025 Skid |

**xxx Nozzle choices =#24 (9.53mm) standard eg. KLMAX63.ISEN70.#24 (Irrigation) or KLMAX63SEN70#24 (Effluent)**

#14 (5.56mm) #16 (6.35mm) #18(7.14mm) #20(7.94mm) #22(8.73mm)

Components

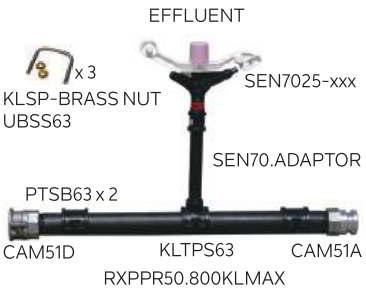


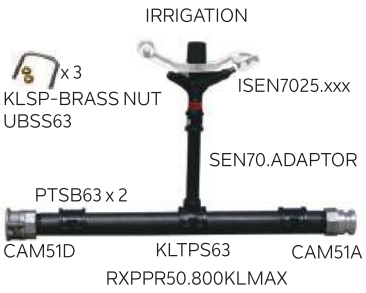



KLMAX63.SKID





| | |
|---|---|
| KLMAX63.ISEN80.xxx | 63mm K-Line® Max[80] Irrigation Senninger 8025 Skid |
| KLMAX63SEN80xxx | 63mm K-Line® Max[80] Effluent Senninger 8025 Skid |

**xxx Nozzle choices =#36 (14.29mm) standard eg. KLMAX63.ISEN80.#36 (Irrigation) or KLMAX63SEN80#36 (Effluent)**

#24 (9.53mm) #26 (10.32mm) #28(11.11mm) #30(11.91mm)
#32(12.7mm) #34 (13.49mm) #38 (15.08mm) #40 (15.88mm)

Components

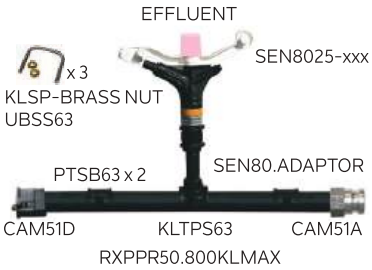


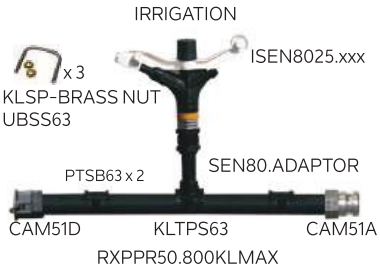



KLMAX63.SKID





## Max$^{70}$ Irrigation for 2 ha

### Infinite flexibility to suit any farm, water or power supply.

Max $^{70}$ is great for crops, seed establishment where you don't want to drag pods everywhere and where you can't pump low volume for long periods, high value areas (flats close to water source) to grow more grass, finishing blocks or just to get you over a pinch period.

- The Max$^{70}$ irrigation system will need to be shifted and the more you shift the greater the area covered.
- Our system is recommended to be suitable for up to 3.24 hectares based on 12 shifts operating for approximately 6 hours per shift.
- Paddock lengths and widths determine how many shifts are required. e.g. - a paddock 180mtr long x 120m wide would be:

  Each pod covers 30m, x 3 pods per system, will therefore cover 90m x 2 shifts = 180m.

  120m width = 4 shifts x 30m.

  Total shifts = 4 x width x 2 length = 8 shifts (fig. 2)
- This selection of nozzle configuration will apply 4.9mm/hour @ 2.8bar at the nozzle to 5.4mm applied per hour @ 3.45bar at the nozzle e.g. Operating for 5.5 hours pumping this system could irrigate roughly 25mm per week with an 8 day return period, (8 shifts).
- Max$^{70}$ irrigation systems can be run in multiples e.g. If you operate 9 pods at one time then an expected mainline pipe size of 90mm PE would be appropriate depending on installation.
- Pumps used are PTO driven (heaps of flow) , or trash pumps that can deliver enough water i.e. 3 pods approximately 12,000ltr for every 2-3 ha system.



**WHAT YOU WILL NEED TO ORDER**

| PRODUCT | QTY |
|---|---|
| KLMAX63.ISEN70#18.8 | 3 |
| K.PIPE63.050C | 2 |
| K.PIPE63.030C | 2 |
| KL63.CAMHOOK51 | 1 |
| RXBV50 | 1 |
| CAM51B | 1 |
| CAM51F | 1 |
| CAM51A | 1 |

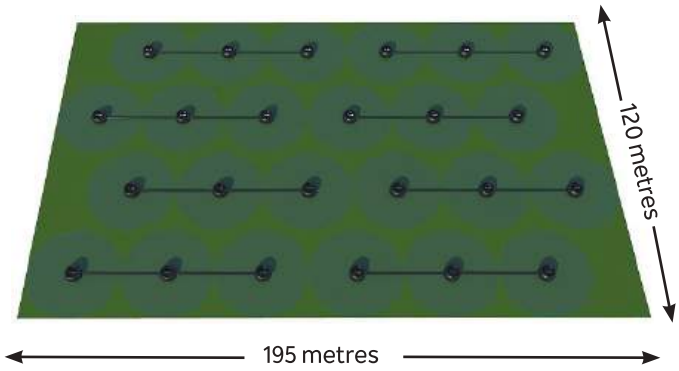


Fig. 2. Max$^{70}$ layout with 8 shifts.

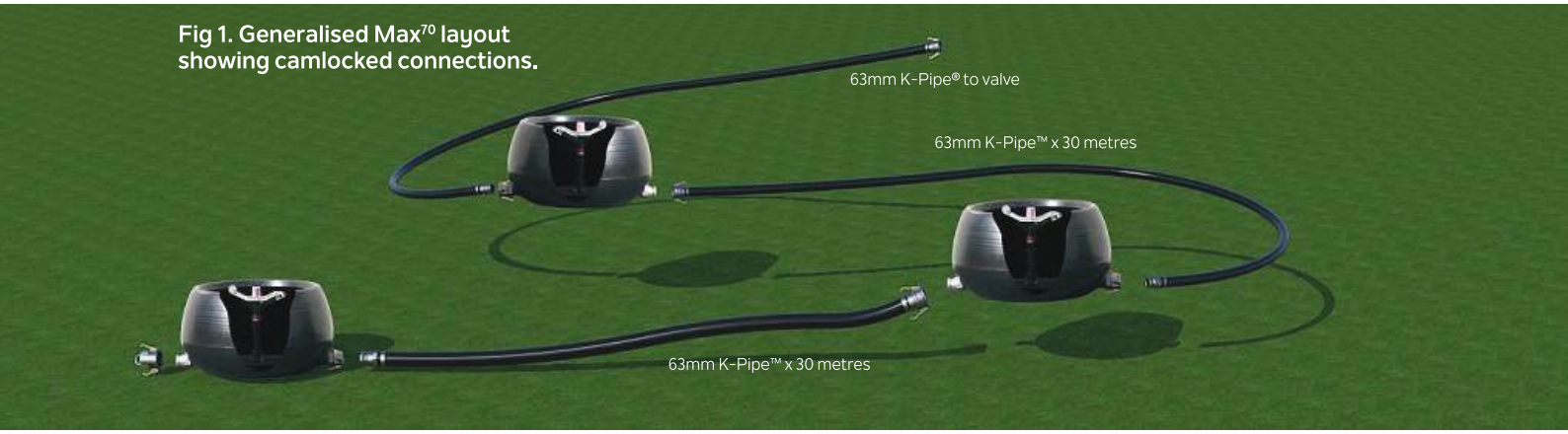


Fig 1. Generalised Max$^{70}$ layout showing camlocked connections.

# K-LINE® SYSTEMS

## Spare Pods

| RXP Code | Description |
|---|---|
| KLSTD.POD | K-Line® Std Skid only complete with U Bolt |
| KLMID.POD | K-Line® Mid Pod only complete with U Bolt |
| KLMAX63.SKID | K-Line® Max Pod only complete with manifold |





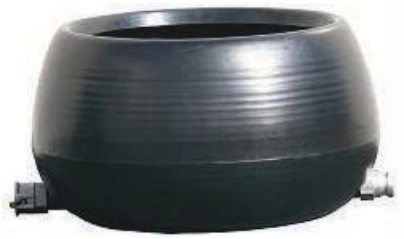

## K-Line® Tapping Saddle and Adaptor Packs

| | Std Pod, Naan 5022 Irrigation/Effluent Fittings Pack |
|---|---|
| NAAN5022-32PK | Brass Nuts, 32mm Tapping Saddle and Naan Adaptor - (Irrigation only) |
| NAAN5022-40PK | Brass Nuts, 40mm Tapping Saddle and Naan Adaptor |
| NAAN5022-45PK | Brass Nuts, 45mm Tapping Saddle and Naan Adaptor |



| | Std Pod, Nelson R2000WF Irrigation Fittings Pack |
|---|---|
| NELR2KWF-32PK | Brass Nuts, 2mm Tapping Saddles and Nelson Adaptor |
| NELR2KWF-40PK | Brass Nuts, 40mm Tapping Saddles and Nelson Adaptor |
| NELR2KWF-45PK | Brass Nuts, 45mm Tapping Saddles and Nelson Adaptor |



| | Std Pod, Nelson Regulated R2000WF Irrigation Fittings Pack |
|---|---|
| NELREGR2KWF-32PK | Brass Nuts, 32mm Tapping Saddles and Nelson Nipple |
| NELREGR2KWF-40PK | Brass Nuts, 40mm Tapping Saddles and Nelson Nipple |
| NELREGR2KWF-45PK | Brass Nuts, 45mm Tapping Saddles and Nelson Nipple |



| | Std Pod, Nelson R20009D Orchard Fittings Pack |
|---|---|
| NELR20009D-45PK | Brass Nuts, 45mm Tapping Saddle and RX Pop Up |



## K-Line® Tapping Saddle and Adaptor Packs

| RXP Code | Description |
|---|---|
| | **Mid Pod, Senninger5035/Naan 5035 Irrigation/Effluent Fittings Pack** |
| KLMID-32PK | Brass Nuts, 32mm Tapping Saddle and Mid Adaptor - (Irrigation only) |
| KLMID-40PK | Brass Nuts, 40mm Tapping Saddle and Mid Adaptor |
| KLMID-45PK | Brass Nuts, 45mm Tapping Saddle and Mid Adaptor |



| | |
|---|---|
| | **Std Pod, 15mm (½") Riser Fittings Pack** |
| KLRK15-32PK | Brass Nuts, 32mm Tapping Saddle, 25 x 15mm Nipple, 25mm QuickLock, 25 x 15mm Socket |
| KLRK15-40PK | Brass Nuts, 40mm Tapping Saddle, 25 x 15mm Nipple, 25mm QuickLock, 25 x 15mm Socket |
| KLRK15-45PK | Brass Nuts, 45mm Tapping Saddle, 25 x 15mm Nipple, 25mm QuickLock, 25 x 15mm Socket |



| | |
|---|---|
| | **Mid Pod, 20mm (¾") Riser Fittings Pack** |
| KLRK20-32PK | Brass Nuts, 32mmTapping Saddle 25 x 15mm Nipple, 25mm QuickLock, 25 x 15mm Socket |
| KLRK20-40PK | Brass Nuts, 40mm Tapping Saddle 25 x 15mm Nipple, 25mm QuickLock, 25 x 15mm Socket |
| KLRK20-45PK | Brass Nuts, 45mm Tapping Saddle 25 x 15mm Nipple, 25mm QuickLock, 25 x 15mm Socket |



# K-LINE® SYSTEMS

## K-Line® Fittings

| RXP Code | Description |
|---|---|
| | **K-Line® Male Coupling** |
| KLMC32 | K-Line® 32mm x 1¼" BSP Male Coupling |
| KLMC40 | K-Line® 40mm x 1½" BSP Male Coupling |
| KLMC4550 | K-Line® 45mm x 2" BSP Male Coupling |
| KLMC50 | K-Line® 50mm x 2" BSP Male Coupling |



| | |
|---|---|
| | **K-Line® Female Coupling** |
| KLFC32 | K-Line® 32mm x 1¼" BSP Female Coupling |
| KLFC40 | K-Line® 40mm x 1½" BSP Female Coupling |
| KLFC50 | K-Line® 50mm x 2" BSP Female Coupling |



| | |
|---|---|
| | **K-Line® Straight Coupling** |
| KLSC32 | K-Line® 32mm Straight Coupling |
| KLSC40 | K-Line® 40mm Straight Coupling |
| KLSC45 | K-Line® 45mm Straight Coupling |
| KLSC50 | K-Line® 50mm Straight Coupling |



| | |
|---|---|
| | **K-Line® Reducing Coupling** |
| KLRC4032 | Kline 40mm x 32mm Reducing Straight Coupling |
| KLRC4540 | Kline 45mm x 40mm Reducing Straight Coupling |



| | |
|---|---|
| | **Pipe Union** |
| APU32 | 32mm Pipe Union |
| APU40 | 40mm Pipe Union |
| APU50 | 50mm Pipe Union |

Refer to RX BSP Fittings Section



| | |
|---|---|
| | **Swivel** |
| ASW32 | 32mm Swivel |
| ASW40 | 40mm Swivel |
| ASW50 | 50mm Swivel |
| Swivel - Used with K-Line® up to a maximum working pressure of 60 psi | |

Rerfer to RX BSP Fittings Section



| | |
|---|---|
| | **Misc** |
| PMA4040 | 40mm x 40mm Plasson Male Adaptor |

# K-LINE® SYSTEMS

## Tapping Saddles and U-Bolts

| RXP Code | Description |
|---|---|
| RXTS3215 | 32mm x 15mm Take-off RX Tapping Saddle (2 bolt) |
| UB32.ORG | Ubolt for RXTS3215, includes brass nuts (Pre 2000) |
| RXTS4015 | 40 x 15mm Take-off RX Tapping Saddle (4 bolt) |
| UB32/40 | Ubolt for RXTS4015, includes brass nuts (2000-2016) |

| | |
|---|---|
| KLTS32 | 32mm Old Style K-Line® Tapping Saddle (One Piece) |
| KLTS40 | 40mm Old Style K-Line® Tapping Saddle (One Piece) |
| UB32/40 | Stainless steel U-bolt includes brass nuts, for KLTS32 and KLTS40 |



RXTS3215
with UB32.ORG



RXTS4015
with UB32/40



KLTS32 or KLTS40
with UB32/40

| | |
|---|---|
| KLTPS32 | 32mm New Style K-Line® Tapping Saddle (One Piece) |
| KLTPS40 | 40mm New Style K-Line® Tapping Saddle (One Piece) |
| KLTPS45 | 45mm New Style K-Line® Tapping Saddle (One Piece) |
| UBSS32/40 | Stainless steel U-bolt includes brass nuts, for KLTPS32, KLTPS40 and KLTPS45 (from 2016) |

| | |
|---|---|
| KLTPS63 | 63mm K-Line® Tapping Saddle 25mm BSP |
| PTSB63 | 63mm K-Line® Tapping Saddle Bare Top |
| UBSS63 | Stainless steel U-bolt includes brass nuts, for KLTPS63 and PTSB63 |

| | |
|---|---|
| KLSP-BRASS NUT | K-Line® Brass Nut suitable for all U bolt styles |





KLTPS40
with UBSS32/40



KLTPS32 or KLTPS45
with UBSS32/40



KLTPS63
with UBSS63



PTSB63
with UBSS63

*Please note: KLTS and KLTPS ranges do not come with brass flange nuts and need to be ordered separately.

# K-LINE® SYSTEMS

## Adaptors

| RXP Code | Description |
|---|---|
| NELSON-ADAPTOR | Nelson Adaptor for non regulated Nelson Sprinkler |
| NELSON-NIPPLE | Nelson Adaptor for mini regulated Nelson Sprinkler |
| NAAN-ADAPTOR | Naan Adaptor For Std K-Line® |
| KLPU15 | Kline 15mm Pop Up |
| MID.ADAPTOR | Mid Adaptor For Mid K-Line® with Senninger 5023 or Naan 5035 Sprinkler |
| SEN70.ADAPTOR | K-Line® Max$^{70}$ Standard Riser 1" x 1" BSP<br>Suits K-Line® Max$^{70}$ Skid Senninger 70 series |
| SEN80.ADAPTOR | K-Line® Max$^{80}$ Standard Riser 1¼" x 1" BSP<br>Suits K-Line® Max$^{80}$ Skid Senninger 80 series |
| NELR33ADAPTOR | Nelson Adaptor - R33 |
| KLQRR.SEN70 | K-Line® Max$^{70}$ Quick Release Riser 1" x 1" BSP<br>Suits K-Line® Max$^{70}$ Skid Senninger 70 series |
| KLQRR.SEN80 | K-Line® Max$^{80}$ Quick Release Riser 1¼" x 1" BSP<br>Suits K-Line® Max$^{80}$ Skid Senninger 80 series |
| RXPPR50.800KLMAX | 50mm polyriser x 800mm with drilled hole for K-Line® Max Pods |


NELSON ADAPTOR


NELSON NIPPLE


NAAN ADAPTOR


KLPU15


MID ADAPTOR


SEN70 ADAPTOR


SEN80 ADAPTOR


NELR33 ADAPTOR


KLQRR SEN70


KLQRR SEN80


RXPPR50.80KLMAX

## K-Line™ Stock Guards

| | K-Line® Stock Guard |
|---|---|
| KLSG.STD | K-Line® Stock Guard for Naan/Nelson Sprinkler (new style) includes screws |
| KLSG.MID | K-Line® Stock Guard For Mid Pod includes screws |
| KLSG.MAX | K-Line® Stock Guard For Max Pod includes screws |


KLSG.STD


KLSG.MID

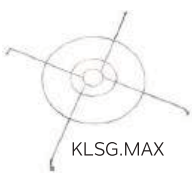
KLSG.MAX

# K-LINE® SYSTEMS

## Tow and Hook Caps

| RXP Code | Description |
|---|---|
| | **Plastic Tow Cap** |
| RXTC32 | 32mm Tow Cap |
| RXTC40 | 40mm Tow Cap |
| RXTC50 | 50mm Tow Cap |



| | |
|---|---|
| | **Plastic Tow Hook** |
| KLPTH32 | 32mm Plastic Tow Hook |
| KLPTH40 | 40mm Plastic Tow Hook |



| | |
|---|---|
| | **Galvanised Hook Cap** |
| RXGHC32 | 32mm Galvanised Hook Cap |
| RXGHC40 | 40mm Galvanised Hook Cap |
| RXGHC50 | 50mm Galvanised Hook Cap |



## Naan Sprinklers

| | |
|---|---|
| | **Naan 5022** |
| NAAN5022SD-xxx | Naan 5022 Super Diffuser Sprinkler (**refer page 114**)<br>- for Std K-Line® ½" BSP Male |



xxx Nozzle choices = red (red 3.00mm) standard eg. NAAN5022SD-RED or NOZZ5022-RED pur (purple 2.5mm) org (orange 2.85mm) grn (green 3.2mm) blue (blue 3.5mm) blk (black 4.0mm)

| | |
|---|---|
| NOZZ5022-xxx | Naan 5022 Super Diffuser Nozzle |



| | |
|---|---|
| | **Naan 427** |
| NAAN427 | Naan 427 Sprinkler - Green nozzles available only |



| | |
|---|---|
| | **Naan 5035** |
| NAAN5035SD-xxx | Naan 5035 Super Diffuser Sprinkler<br>- for Std or Mid K-Line® ¾" BSP Male |



xxx Nozzle choices = red (red 6.00mm) standard eg. NAAN5035SD-RED or NOZZ5035-RED blue (blue 3.5mm) blk (black 4.0mm) brn (brown 4.5mm) pur(purple 5.0mm) org (orange 5.5mm) grey (grey 6.5mm) grn (green 7.0mm)

| | |
|---|---|
| NOZZ5035-xxx | Naan 5035 Super Diffuser Nozzle |



# K-LINE® SYSTEMS

## Nelson Sprinklers and Regulators

| RXP Code | Description |
|---|---|
| NEL-R2000WF-xx/xx | Nelson R2000 Windfighter Sprinkler with Acme connection |



xxx.xxx choices (Plate.nozzle) = red.red (WF16 x #16 ) standard eg. NEL-R2000WF-RD/RD gr.gr (WF14 x #14) rd.tn (WF16 x #15) gl.gl (WF18 x #18) br.br (WF20 x #20) **refer page 114**

| | |
|---|---|
| NELSON.R33.xxx.xxx | Nelson R33 Sprinkler with Acme connection |



xxx.xxx choices (Plate.nozzle) = gry.#22 (grey 22 x 4.4mm ) standard
eg. NELSON.R33.GRY.#22 gld.#18 (gold 18 x 3.6mm) brn.#20 (brown 20 x 4.00mm) grn.#24 (green 24 x 4.8mm) **refer page 115**

| | |
|---|---|
| NELSON.NOZZ.xxx | Nelson 2TN Effluent Nozzle |



xxx choices (Nozzles) = red (#16 ) NELSON.NOZZ.RED
grn (#14) tan (#15) gld (#18) brn (#20)

| | |
|---|---|
| NELSON.PLATE.xxx | Nelson Plate |



xxx choices (Plate) = red (WF16) standard eg. NELSON.PLATE.RED
grn (WF14) gld (WF18) brn (WF20)

| | Mini Regulator Drain Check (MRDC) |
|---|---|
| NEL-MRDC-40PSI | Nelson Mini Regulator Drain Check (MRDC) 40Psi |
| NEL-MRDC-45PSI | Nelson Mini Regulator Drain Check (MRDC) 45Psi |
| NEL-MRDC-50PSI | Nelson Mini Regulator Drain Check (MRDC) 50Psi |



Brown Body

MR = Pressure Regulator, DC = Drain Check.
The regulator will only open at a medium pressure and will close at medium pressure, this stops drainage in the pipeline.

| | Mini Regulator (MR) |
|---|---|
| NEL-MR 40PSI MINIREG | Nelson Mini Regulator (MR) 40Psi |
| NEL-MR 45PSI MINIREG | Nelson Mini Regulator (MR) 45Psi |
| NEL-MR 50PSI MINIREG | Nelson Mini Regulator (MR) 50Psi |



Grey Body

MR = Pressure Regulator.

## Senninger Sprinklers



| RXP Code | Description |
|---|---|
| ISEN5023.xxx | Irrigation Senninger 5023 Sprinkler #16 (white 5.16mm) |
| SEN5023-xxx | Effluent Senninger 5023 Sprinkler #16 (white 5.16mm) |
| SEN5023-NOZZ-xxx | Senninger 5023 #16 (white 5.16mm) Irrigation/Effluent Nozzle |

xxx Nozzle choices = #16 (orange 6.35mm) standard
eg. ISEN5023.#16 (Irrigation) or SEN5023-#16 (Effluent) or SEN5023-NOZZ-#16 (Nozzle)
#13 (white 5.16mm) #14 (blue 5.56mm) #15 (dark brown 5.95mm) #17 (dark green 6.75mm)
#18 (purple 7.14mm)

| | |
|---|---|
| ISEN7025.xxx | Irrigation Senninger 7025 Sprinkler #24 (5.56mm) |
| SEN7025-xxx | Effluent Senninger 7025 Sprinkler #24 (5.56mm) |
| SEN7025-NOZZ-xxx | Senninger 7025 #24 (5.56mm) Irrigation/Effluent Nozzle |
| SEN7025.ARM.ASSY | 7025 Assembly - Splasharm, Spring, Holder, Pin |
| SEN7025.BEARING. ASSY | 7025 Plastic Bearing Assembly |

xxx Nozzle choices =#24 (9.53mm) standard
eg. ISEN7025.#24 (Irrigation) or SEN7025-#24 (Effluent), or SEN7025-NOZZ-#24 (Nozzle)
#14 (5.56mm) #16 (6.35mm) #18(7.14mm) #20(7.94mm) #22(8.73mm)



| | |
|---|---|
| ISEN8025.xxx | Irrigation Senninger 8025 Sprinkler #36 (9.53mm) |
| SEN8025-xxx | Effluent Senninger 8025 Sprinkler #36 (9.53mm) |
| SEN8025-NOZZ-xxx | Senninger 8025 #36 (9.53mm) Irrigation/Effluent Nozzle |
| SEN8025.ARM.ASSY | 8025 Assembly - Splash Arm, |
| SEN8025.BEARING. ASSY | 8025 Plastic Bearing Assembly |

xxx Nozzle choices =#36 (14.29mm) standard
eg. ISEN8025.#36 (Irrigation) or SEN8025-#36 (Effluent) or SEN8025-NOZZ-#36 (Nozzle)
#24 (9.53mm) #26 (10.32mm) #28(11.11mm) #30(11.91mm) #32(12.7mm) #34 (13.49mm)
#38 (15.08mm) #40 (15.88mm)



# K-LINE® SYSTEMS

## K-Line® Miscellaneous

| RXP Code | Description |
|---|---|
| KLTL14.DRILL | 14mm Spade Drill - Stepped |
| KLTL3.8.13.SOCKET | ⅜" Drive x 13mm Long Socket |
| KLTL3.8.150.EXTN | ⅜" Drive 150mm Extension |
| KLTL3.8.DRILL.ADAPTOR | ⅜" Drive x Drill Head |
| KLR.2 | K-Line® Riser - 2Mtr |
| KL.ROPE | K-Line® Ball Tow Rope 16mm x 2.5M |
| KLKSB | K-Line® Kwik Shift Ball |
| KL63.CAMCOUP51 | 51mm Camlock M & M Coupler Components - CAM51A and CAM51F |
| KL63.CAMHOOK51 | 51mm Camlock Female & Hook Cap Components - CAM51B and RXGHC50 |









## Weeping Walls and Pond Filter

| | |
|---|---|
| KLWEEP1000.1200.6MM | 6mm Gap x 1000mm x 1200mm PVC Weeping Wall |
| KLWEEP1000.1200.8MM | 8mm Gap x 1000mm x 1200mm PVC Weeping Wall |
| KLWEEP1000.1500.4MM | 4mm Gap x 1000mm x 1500mm PVC Weeping Wall |
| KLWEEP1000.1500.6MM | 6mm Gap x 1000mm x 1500mm PVC Weeping Wall |
| KLWEEP1000.1500.8MM | 8mm Gap x 1000mm x 1500mm PVC Weeping Wall |
| KLWEEP1200.1200.4MM | 4mm Gap x 1200mm x 1200mm PVC Weeping Wall |
| KLWEEP1200.1200.6MM | 6mm Gap x 1200mm x 1200mm PVC Weeping Wall |
| KLWEEP1200.1200.8MM | 8mm Gap x 1200mm x 1200mm PVC Weeping Wall |
| KLWEEP600.2000.4MM | 4mm Gap x 600mm x 2000mm PVC Weeping Wall |
| KLWEEP600.2000.6MM | 6mm Gap x 600mm x 2000mm PVC Weeping Wall |
| KLWEEP600.2000.8MM | 8mm Gap x 600mm x 2000mm PVC Weeping Wall |



| | |
|---|---|
| KLPF | K-Line® Pond Filter |



# K-LINE® SYSTEMS

## K-Line® Std and Mid Pods Hydrants




## K-Line® Std and Mid Pods Fittings Options




**32mm Feed - 32mm K-Line**
= KLMC 32mm x 1¼", APU 32 (1¼") & KLMC 32mm x 1¼"

**40mm Feed - 32mm K-Line**
= KLMC 40mm x 1½", ARPU 4032 (1½" x 1¼") & KLMC 32mm x 1¼"

**40mm Feed - 40mm K-Line**
= KLMC 40mm x 1½", APU 40 (1½") & KLMC 40mm x 1½"

**45mm Feed - 40mm K-Line**
= KLMC 4550 x 2", APU 50 (2"), RXRB 5040 (2" x 1½") & KLMC 40mm x 1½"

**45mm Feed - 45mm K-Line**
= KLMC 4550 x 2", APU 50 (2"), & KLMC 4550 x 2"

## Connections - Feedline and K-Line®



KLSC32
32mm straight coupling



KLSC40
40mm straight coupling



KLRC4032
40 x 32mm reducing coupling

KLRC4550
45 x 50mm reducing coupling

# K-LINE® SYSTEMS

## End Connectors Std and Mid Pods




**K-Line® Std & Mid**

32mm = KLMC 32mm x 1¼" & RXTC 32mm (1¼")

40mm = KLMC 40mm x 1½" & RXTC 40mm (1½")

45mm = KLMC 45mm x 2" & RXTC 50mm (2")

## K-Line® Std and Mid Internal Connections



Naan 5022SD
Naan Adaptor
Tapping Saddle



Nelson R2000WF
Mini Regulator
Nelson Nipple
Tapping Saddle



Nelson R2000WF
Nelson Adaptor
Tapping Saddle



Nelson R33
Nelson R33 Adaptor
Tapping Saddle



Nelson R20009D
Pop-Up Adaptor
Tapping Saddle



Naan 5035SD
Mid Adaptor
Tapping Saddle



Senninger 5023 Effluent
Mid Adaptor
Tapping Saddle



Senninger 5023 Irrigation
Mid Adaptor
Tapping Saddle

# SOLID SET
## IRRIGATION



- Variable rate irrigation.
- No shifting required, removing labour costs.
- Permanent irrigation assets enhance land values and returns.
- Operations can be easily adjusted for seasonal requirements, stock movements and other farm maintenance activities.
- Lower maintenance costs compared to pivots.
- No need to remove shelterbelts and move fencing.
- Able to fertigate through the system as components are noncorrosive.
- Lower operational risks.



### G-SET® POD

The G-Set® Pod solid set system is capable of operating in many environments where terrain or layout is not suitable for traditional types of irrigation such as centre pivots. With this sort of flexibility G-Set® is also ideal for use in conjunction with these types of irrigation systems to infill the areas where they are unable to reach, creating 100% effective use of the land.

- Sprinklers are low to the ground to minimise loss to the atmosphere.
- Variable installation depth with side entry for pipe work.
- Suitable for steep hill country and other marginal land.
- Lower to the ground to avoid stock rubbing against posts and damaging units.
- Low pressure system.
- Modular and scalable.



### POST

- Higher sprinkler is suitable for more crop types.
- Low pressure system.
- Modular and scalable.

# G-SET® SOLID SET IRRIGATION

## TYPE A5 SIDE ENTRY

**K-LINE® G-Set Type A5 Side Entry: KLGS63.A5.SE.80#XX**
63mm Main Line G-Set® + Senninger 8025 Sprinkler + 2 Way Inline Hydraulic Valve, Side Entry and Heavy Duty Stockguard
e.g. KLGS63.A5.SE.80#32 (ø12.7mm Nozzles + 6V DC 2 Way Latch Valve, side entry )



G-Set Pod




Valve and Sprinkler unit

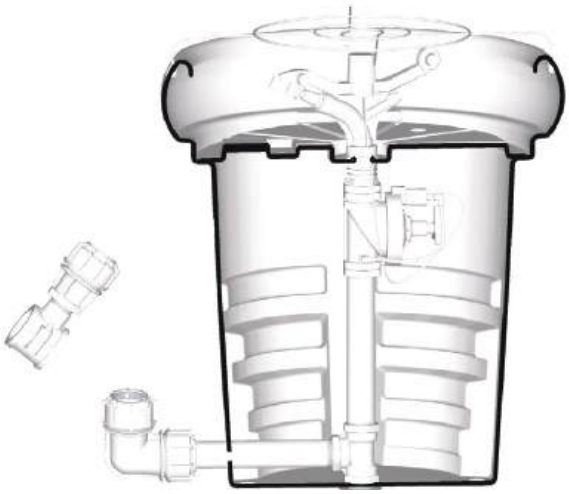

| RXP Code | Description |
|---|---|
| KLGS63.A5.#XX.6VDCL | 63mm G-Set + Senninger 8025 Sprinkler + 2 Way Inline Hydraulic Valve and Heavy Duty Stockguard |
| *#XX Choices (Nozzle) = | #32 (12.7mm) standard - KLGS63.A5.SE.80#32<br>#34 (13.49mm) #36 (14.29mm) |

# TYPE POST A

**K-LINE® G-Set® Type POST A: KLGS63.A.POST.#XX**
63mm Main Line + (Post) + Senninger 8025 Sprinkler + 2 Way Inline Hydraulic Valve
NB: POST not supplied
e.g. KLGS63.A.POST.#32 (ø12.7mm Nozzles + 6V DC 2 Way Latch Valve)



Valve and Sprinkler unit

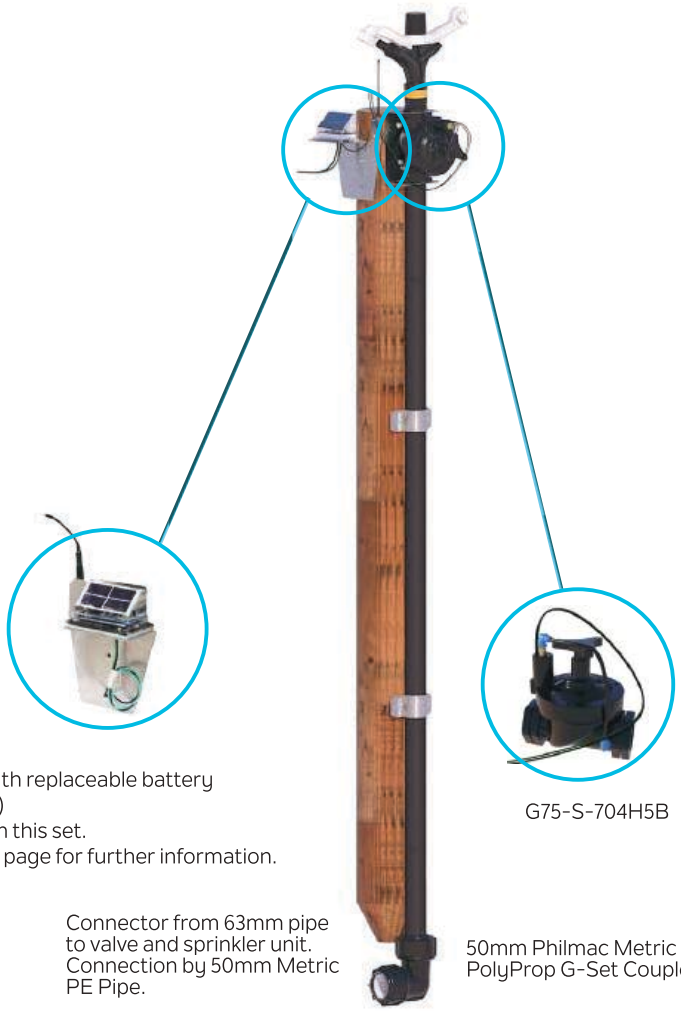

KLGS.RX2000-P
Post Mount IPC with replaceable battery
(1500mAhr @ 3.7V)
NB. Not included in this set.
See the Controller page for further information.

G75-S-704H5B

Connector from 63mm pipe to valve and sprinkler unit. Connection by 50mm Metric PE Pipe.

50mm Philmac Metric Elbow x PolyProp G-Set Coupler



63 x 40mm Tapping Saddle and 50mm Philmac Metric Fitting x 1½"

| RXP Code | Description |
|---|---|
| KLGS63.A.POST.#32 | 63mm Main Line + (POST) + Senninger 8025 Sprinkler + 2 Way Inline Hydraulic Valve. N.B POST not supplied |
| *#XX Choices (Nozzle) = | #32 (12.7mm) standard - KLGS63.A.POST.#32<br>#34 (13.49mm) #36 (14.29mm) |

# G-SET® SOLID SET IRRIGATION

## TYPE POST A

**K-LINE® G-Set® Type POST A: KLGS63.A.POST.PC**
63mm Main Line + (Post) + ATOM28 Sprinkler complete with 3 nozzles (10mm, 12mm and 14mm)+ 2 Way Inline Hydraulic Valve
NB: POST not supplied.



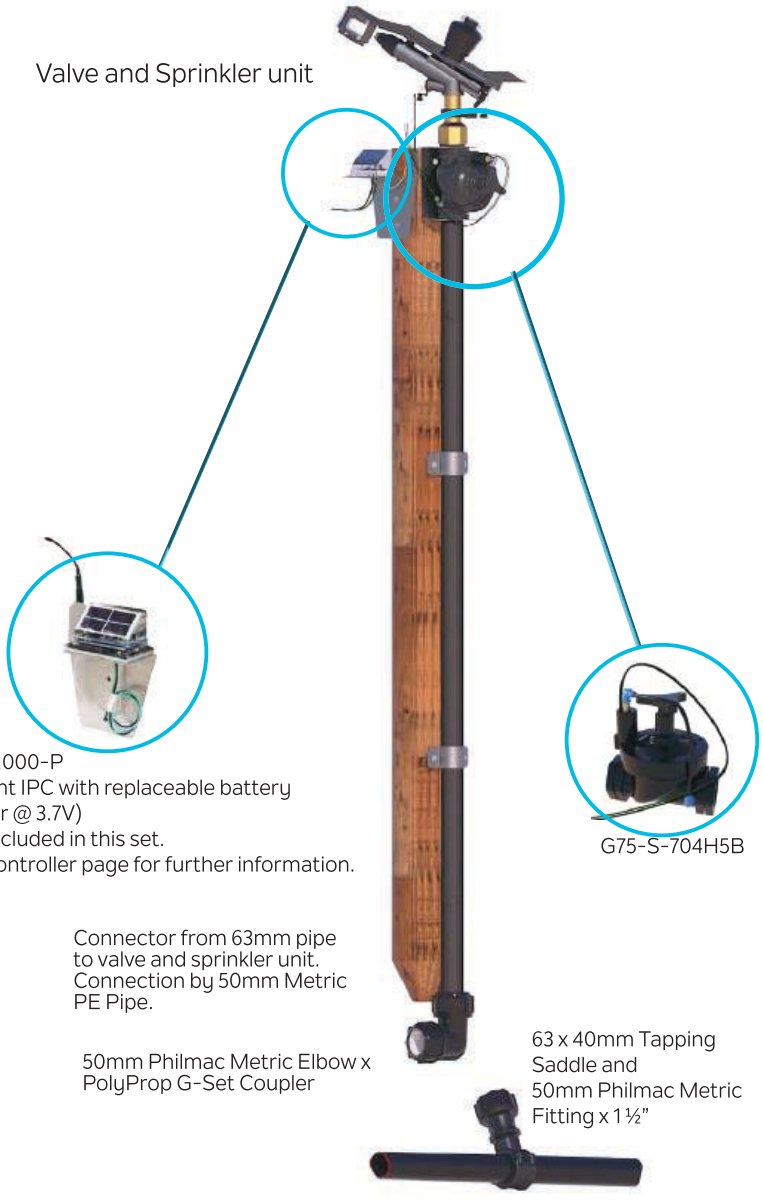


| RXP Code | Description |
|---|---|
| KLGS63.A.POST.PC | 63mm Main Line + (POST) + ATOM28 Sprinkler + 2 Way Inline Hydraulic Valve. N.B POST not supplied |

# G-SET® SOLID SET IRRIGATION

## Water-Insight Controllers







| RXP Code | Description |
|---|---|
| KLGS.RX2000-P | Irrigation Pod Controller, complete with Stainless Steel bracket and mounted aerial - Generation 2 with replaceable battery |
| KLGS.RX2000-2 | Irrigation Pod Controller (IPC) Generation 2 - Replaceable Battery |
| Controllers will be preprogrammed for each system by RXP, upon system delivery. | |
| KLGS.C-1013 | Irrigation Pod Controller (IPC), Battery and bracket |



Water-Insight also offer a fully cloud based platform, designed to provide farmers with a smart way of monitoring and controlling the use of water. It allows farmers to visualise their farm operations and remotely manage all irrigation and sensor devices. This service is subsciption based.

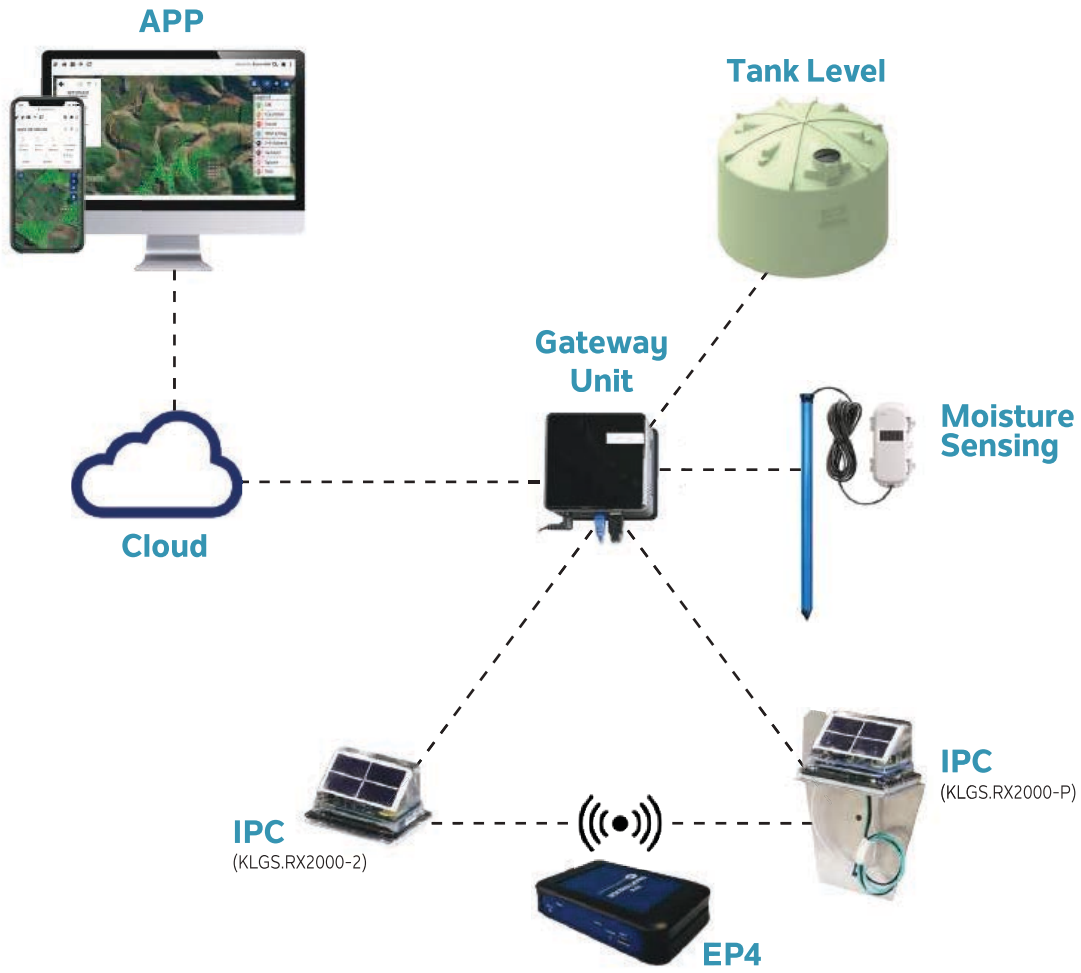

# G-SET® SOLID SET IRRIGATION

## Performance Table - Naan5022SD

| Nozzle (mm) | P bar | Q $m^3$/hr | D m |
|---|---|---|---|
| 2.5 Purple | 2.5 | 0.360 | 21.0 |
| | 3.0 | 0.440 | 21.0 |
| | 4.0 | 0.510 | 21.0 |
| 2.8 Orange | 2.5 | 0.530 | 22.0 |
| | 3.0 | 0.580 | 22.0 |
| | 4.0 | 0.670 | 23.0 |
| 3.0 Red | 2.5 | 0.570 | 21.0 |
| | 3.0 | 0.630 | 22.0 |
| | 4.0 | 0.720 | 23.0 |
| 3.2 Green | 2.5 | 0.640 | 21.2 |
| | 3.0 | 0.700 | 22.2 |
| | 4.0 | 0.810 | 23.0 |
| 3.5 Blue | 2.5 | 0.740 | 23.0 |
| | 3.0 | 0.810 | 23.0 |
| | 4.0 | 0.930 | 24.0 |
| 4.0 Black | 2.5 | 0.95 | 23.2 |
| | 3.0 | 1.030 | 24.2 |
| | 4.0 | 1.180 | 26.0 |



## Performance Table - Naan5035SD

| Nozzle (mm) | P bar | Q $m^3$/hr | D m |
|---|---|---|---|
| 3.5 Blue | 3.0 | 0.790 | 24.0 |
| | 4.0 | 0.910 | 25.0 |
| | 5.0 | 1.040 | 25.0 |
| 4.0 Black | 3.0 | 1.040 | 26.0 |
| | 4.0 | 1.200 | 26.0 |
| | 5.0 | 1.350 | 28.0 |
| 4.5 Brown | 3.0 | 1.320 | 28.0 |
| | 4.0 | 1.540 | 29.0 |
| | 5.0 | 1.710 | 30.0 |
| 5.0 Purple | 3.0 | 1.610 | 29.0 |
| | 4.0 | 1.870 | 31.0 |
| | 5.0 | 2.100 | 32.0 |
| 5.5 Orange | 3.0 | 1.930 | 31.0 |
| | 4.0 | 2.230 | 34.0 |
| | 5.0 | 2.490 | 35.0 |
| 6.0 Red | 3.0 | 2.260 | 32.0 |
| | 4.0 | 2.620 | 34.0 |
| | 5.0 | 2.940 | 36.0 |



## Performance Table - R2000WF

### Plate/Nozzle Options and Flow Performance in LPH

| Plate Options* | Recommended Nozzles | BAR | | | | |
|---|---|---|---|---|---|---|
| | | 2.75 | 3.0 | 3.5 | 4.0 | 4.5 |
| Green WF 14 Radius 39 -41 Ft (11.9 - 12.5 M) | # 14 Green (7/64) | 487 | 509 | 550 | 590 | 626 |
| Red WF 16 Radius 41 -43 Ft (12.5 - 13.1 M) | # 15 Tan (15/128) | 574 | 597 | 647 | 695 | 737 |
| | #16 Red (1/8) | 655 | 685 | 739 | 792 | 837 |
| Gold WF18 Radius 40 -42 Ft (12.2 - 12.8 M) | # 18 Gold (9/64) | 834 | 869 | 940 | 1001 | 1060 |
| Dark Brown WF20 Radius 42 -45 Ft (12.8 - 13.7 M) | # Dark Brown *** | 1016 | 1062 | 1144 | 1222 | 1295 |



# G-SET® SOLID SET IRRIGATION

## Performance Table - R33

| Plate | Nozzle | | R33 Performance Range 2.75 - 4.5 Bar | | | | | | | |
|---|---|---|---|---|---|---|---|---|---|---|
| | | | Pressure In | | | | | | | |
| | | | 2.75 | 3.00 | 3.25 | 3.50 | 3.75 | 4.00 | 4.25 | 4.50 |
| Gold 18 | 3.6mm | LPH | 825 | 862 | 897 | 931 | 964 | 996 | 1027 | 1058 |
| | | RAD (m) | 13.4 | 13.6 | 13.7 | 13.7 | 13.7 | 14.0 | 14.0 | 13.7 |
| Brown 20 | 4.0mm | LPH | 1009 | 1054 | 1099 | 1143 | 1179 | 1217 | 1255 | 1293 |
| | | RAD (m) | 14.0 | 14.2 | 14.5 | 14.6 | 14.7 | 14.6 | 14.5 | 14.3 |
| Grey 22 | 4.4mm | LPH | 1218 | 1272 | 1325 | 1375 | 1423 | 1468 | 1511 | 1554 |
| | | RAD (m) | 14.6 | 14.8 | 15.1 | 15.2 | 15.0 | 15.0 | 14.8 | 14.6 |
| Green 24 | 4.8mm | LPH | 1447 | 1513 | 1577 | 1639 | 1698 | 1753 | 1807 | 1862 |
| | | RAD (m) | 14.9 | 15.2 | 15.4 | 15.5 | 15.5 | 15.5 | 15.5 | 15.2 |



## Performance Table - R2000 9°

| Plate Series | Plate Options | Recommended Nozzles | BAR | | | | |
|---|---|---|---|---|---|---|---|
| | | | 2.0 | 2.5 | 3.0 | 3.5 | 4.0 |
| K4 | K4 9° Purple Radius 8.2 -9.4m<br>Stream Ht: 54-79 cm | Yellow #13 | 366 | 411 | 451 | 487 | 521 |
| | | Green #14 | 413 | 463 | 509 | 550 | 590 |
| | | 1.5 2000 FC | 1.5 2000FC* nominal flow - **341 LPH** | | | | |
| | | 2.0 2000 FC | 2.0 2000FC* nominal flow - **454 LPH** | | | | |
| K5 | K5 9° Orange Radius 8.5 -9.4m<br>Stream Ht: 58-86cm | Tan #15 | 485 | 544 | 597 | 647 | 695 |
| | | Dark Red #16 | 559 | 624 | 685 | 739 | 792 |
| | | 2.5 2000FC | 2.5 2000FC* nominal flow - **568 LPH** | | | | |

The performance data in this section has been recorded under ideal test conditions and may be adversely affected by poor hydraulic entrance conditions, slope, riser tilt, temperature, wind or other factors.



Plate colour band comes in white, black or grey to match the diffuser colour.

**Always be sure**

- To use the nozzle size that is recommended for the plate.
- The operating pressure is within the recommended range.
- The colour of the diffuser for the R2000 matches that of the colour band on the R2000 plate.

Only the nozzle and plate combinations grouped together in the above chart are recommended.

* Flow control nozzle are flow regulating within a flow range of no more than 3.5% greater and 8% less than the nominal flow.

# G-SET® SOLID SET IRRIGATION

## Performance Table - Senninger 5023 - Irrigation

| Sprinkler Base Pressure [Bar] | 2.07 | 2.41 | 2.76 | 3.10 | 3.45 | 3.79 | 4.14 | 4.48 |
|---|---|---|---|---|---|---|---|---|
| **#13 Nozzle - White [5.16mm]** | | | | | | | | |
| Flow [L/h] | 1476 | 1594 | 1701 | 1806 | 1903 | 1999 | 2087 | 2169 |
| Diam.at 0.46m ht. [m] | 28.0 | 29.0 | 29.9 | 30.5 | 31.1 | 31.4 | 31.7 | 32.0 |
| **#14 Nozzle - Blue [5.56mm]** | | | | | | | | |
| Flow [L/h] | 1701 | 1837 | 1960 | 2083 | 2194 | 2294 | 2408 | 2498 |
| Diam.at 0.46m ht. [m] | 28.7 | 29.9 | 30.8 | 31.4 | 32.0 | 32.3 | 32.6 | 32.9 |
| **#15 Nozzle - Dark Brown [5.95mm]** | | | | | | | | |
| Flow [L/h] | 1933 | 2087 | 2228 | 2362 | 2498 | 2612 | 2725 | 2839 |
| Diam. at 0.46m ht. [m] | 29.3 | 30.5 | 31.4 | 32.3 | 32.6 | 32.9 | 33.2 | 33.5 |
| **#16 Nozzle - Orange [6.35mm]** | | | | | | | | |
| Flow [L/h] | 2187 | 2362 | 2521 | 2680 | 2816 | 2953 | 3089 | 3225 |
| Diam. at 0.46m ht. [m] | 29.9 | 31.1 | 32.0 | 32.9 | 33.2 | 33.5 | 33.8 | 34.1 |
| **#17 Nozzle - Dark Green [6.75mm]** | | | | | | | | |
| Flow [L/h] | 2430 | 2635 | 2794 | 2975 | 3134 | 3293 | 3430 | 3566 |
| Diam. at 0.46m ht. [m] | 30.2 | 31.7 | 32.6 | 33.5 | 33.8 | 34.1 | 34.4 | 34.7 |
| **#18 Nozzle - Purple [7.14mm]** | | | | | | | | |
| Flow [L/h] | 2703 | 2930 | 3112 | 3316 | 3498 | 3657 | 3816 | 3975 |
| Diam. at 0.46m ht. [m] | 30.5 | 32.0 | 33.2 | 34.1 | 34.4 | 34.7 | 35.1 | 35.4 |



## Performance Table - Senninger 5023 - Effluent

| Sprinkler Base Pressure [Bar] | 2.07 | 2.41 | 2.76 | 3.10 | 3.45 | 3.79 | 4.14 | 4.48 |
|---|---|---|---|---|---|---|---|---|
| **#13 Nozzle - White [5.16mm]** | | | | | | | | |
| Flow [L/h] | 1476 | 1594 | 1701 | 1806 | 1903 | 1999 | 2087 | 2169 |
| Diam.at 0.46m ht. [m] | 27.4 | 28.0 | 28.7 | 39.3 | 29.9 | 30.5 | 30.7 | 30.8 |
| **#14 Nozzle - Blue [5.56mm]** | | | | | | | | |
| Flow [L/h] | 1701 | 1837 | 1960 | 2083 | 2194 | 2294 | 2408 | 2498 |
| Diam.at 0.46m ht. [m] | 27.7 | 28.3 | 29.0 | 39.6 | 32.2 | 32.8 | 31.4 | 31.4 |
| **#15 Nozzle - Dark Brown [5.95mm]** | | | | | | | | |
| Flow [L/h] | 1933 | 2087 | 2228 | 2362 | 2498 | 2612 | 2725 | 2839 |
| Diam. at 0.46m ht. [m] | 28.0 | 28.7 | 29.3 | 29.9 | 30.5 | 31.1 | 31.7 | 32.0 |
| **#16 Nozzle - Orange [6.35mm]** | | | | | | | | |
| Flow [L/h] | 2187 | 2362 | 2521 | 2680 | 2816 | 2953 | 3089 | 3225 |
| Diam. at 0.46m ht. [m] | 29.9 | 31.1 | 32.0 | 32.9 | 33.2 | 33.5 | 33.8 | 34.1 |
| **#17 Nozzle - Dark Green [6.75mm]** | | | | | | | | |
| Flow [L/h] | 2430 | 2635 | 2794 | 2975 | 3134 | 3293 | 3430 | 3566 |
| Diam. at 0.46m ht. [m] | 28.7 | 29.3 | 29.9 | 30.5 | 31.1 | 31.7 | 32.3 | 32.6 |
| **#18 Nozzle - Purple [7.14mm]** | | | | | | | | |
| Flow [L/h] | 2703 | 2930 | 3112 | 3316 | 3498 | 3657 | 3816 | 3975 |
| Diam. at 0.46m ht. [m] | 29.0 | 29.6 | 30.2 | 30.8 | 31.4 | 32.0 | 32.6 | 32.9 |



# G-SET® SOLID SET IRRIGATION

## Performance Table - Senninger 7025 - Irrigation and Effluent





| Sprinkler Base Pressure [Bar] | 2.41 | 2.76 | 3.10 | 3.45 | 3.79 | 4.14 | 4.48 | 4.83 |
|---|---|---|---|---|---|---|---|---|
| **#14 Nozzle [5.56mm]** | | | | | | | | |
| Flow [L/h] | 1837 | 1967 | 2090 | 2201 | 2317 | 2408 | 2498 | 2612 |
| Diam.at 0.46m ht. [m] | 32.3 | 33.8 | 34.4 | 35.1 | 35.7 | 36.3 | 36.9 | 37.5 |
| **#16 Nozzle - [6.35mm]** | | | | | | | | |
| Flow [L/h] | 2430 | 2589 | 2748 | 2907 | 3043 | 3180 | 3316 | 3430 |
| Diam. at 0.46m ht. [m] | 33.8 | 35.7 | 36.6 | 37.5 | 38.4 | 39.3 | 39.9 | 40.5 |
| **#18 Nozzle - [7.14mm]** | | | | | | | | |
| Flow [L/h] | 3021 | 3225 | 3407 | 3611 | 3770 | 3952 | 4111 | 4270 |
| Diam. at 0.46m ht. [m] | 36.0 | 37.8 | 38.7 | 39.3 | 40.8 | 42.4 | 43.3 | 43.9 |
| **#20Nozzle - [7.94mm]** | | | | | | | | |
| Flow [L/h] | 3634 | 3884 | 4134 | 4361 | 4565 | 4770 | 4951 | 5156 |
| Diam. at 0.46m ht. [m] | 37.8 | 39.6 | 40.8 | 41.8 | 43.8 | 44.5 | 45.7 | 46.6 |
| **#22Nozzle - [8.73mm]** | | | | | | | | |
| Flow [L/h] | 4384 | 4656 | 4951 | 5201 | 5474 | 5701 | 5928 | 6155 |
| Diam. at 0.46m ht. [m] | 38.4 | 40.5 | 43.0 | 45.1 | 46.6 | 47.9 | 48.8 | 49.4 |
| **#24Nozzle - [9.53mm]** | | | | | | | | |
| Flow [L/h] | 5088 | 5428 | 5746 | 6064 | 6359 | 6655 | 6905 | 7177 |
| Diam. at 0.46m ht. [m] | 39.6 | 42.1 | 44.2 | 46.0 | 47.5 | 48.8 | 50.6 | 51.5 |

# G-SET® SOLID SET IRRIGATION

## Performance Table - Senninger 8025 - Irrigation and Effluent





| Sprinkler Base Pressure [Bar] | 2.41 | 2.76 | 3.10 | 3.45 | 3.79 | 4.14 | 4.48 | 4.83 | 5.17 |
|---|---|---|---|---|---|---|---|---|---|
| **#24 Nozzle [9.53mm]** | | | | | | | | | |
| Flow [L/h] | 5360 | 5724 | 6064 | 6405 | 6723 | 7018 | 7291 | 7563 | 7836 |
| Diam.at 0.46m ht. [m] | 39.0 | 40.8 | 42.4 | 43.9 | 45.4 | 46.9 | 47.9 | 48.5 | 48.8 |
| **#26 Nozzle - [10.32mm]** | | | | | | | | | |
| Flow [L/h] | 5542 | 6655 | 7041 | 7427 | 7790 | 8154 | 8472 | 8790 | 9108 |
| Diam. at 0.46m ht. [m] | 41.5 | 43.3 | 44.8 | 46.3 | 47.9 | 49.1 | 50.0 | 50.6 | 51.2 |
| **#28Nozzle - [11.11mm]** | | | | | | | | | |
| Flow [L/h] | 7223 | 7700 | 8176 | 8631 | 9040 | 9448 | 9834 | 10198 | 10561 |
| Diam. at 0.46m ht. [m] | 43.3 | 45.1 | 46.6 | 47.9 | 49.1 | 50.6 | 51.5 | 52.1 | 52.7 |
| **#30Nozzle - [11.9mm]** | | | | | | | | | |
| Flow [L/h] | 8199 | 8767 | 9289 | 9789 | 10266 | 10720 | 11175 | 11583 | 11992 |
| Diam. at 0.46m ht. [m] | 44.8 | 46.6 | 48.2 | 49.4 | 50.6 | 51.8 | 52.7 | 53.3 | 54.3 |
| **#32Nozzle - [12.7mm]** | | | | | | | | | |
| Flow [L/h] | 9312 | 9971 | 10561 | 11129 | 11674 | 12197 | 12696 | 13173 | 13650 |
| Diam. at 0.46m ht. [m] | 45.7 | 47.5 | 49.1 | 50.3 | 51.5 | 52.7 | 53.6 | 54.6 | 55.8 |
| **#34Nozzle - [13.49mm]** | | | | | | | | | |
| Flow [L/h] | 10516 | 11243 | 11924 | 12583 | 13196 | 13786 | 14332 | 14877 | 15399 |
| Diam. at 0.46m ht. [m] | 46.6 | 48.5 | 50.0 | 51.2 | 52.4 | 53.6 | 54.9 | 55.8 | 56.7 |
| **#36Nozzle - [14.29mm]** | | | | | | | | | |
| Flow [L/h] | 11788 | 12605 | 13378 | 14104 | 14786 | 15444 | 16080 | 16694 | 17261 |
| Diam. at 0.46m ht. [m] | 42.7 | 49.1 | 50.6 | 51.8 | 53.0 | 54.3 | 55.8 | 57.0 | 57.9 |
| **#38Nozzle - [15.08mm]** | | | | | | | | | |
| Flow [L/h] | 12719 | 13605 | 14422 | 15195 | 15944 | 16648 | 17330 | 17988 | 18624 |
| Diam. at 0.46m ht. [m] | 47.9 | 49.7 | 51.2 | 52.4 | 53.6 | 54.9 | 56.4 | 57.9 | 58.5 |
| **#40Nozzle - [15.88mm]** | | | | | | | | | |
| Flow [L/h] | - | 15240 | 16149 | 17034 | 17875 | 18647 | 19419 | 20146 | 20850 |
| Diam. at 0.46m ht. [m] | - | 50.3 | 51.8 | 53.0 | 54.3 | 55.5 | 57.0 | 58.5 | 59.1 |

# INDUSTRIAL



## Welding

- RXP has the expertise and facilities to undertake plastic welding on our site or yours.
- This includes welding of fittings onto tanks.
- Our commitment to Health and Safety means we are qualified to:
  - work in confined space or at height
  - hold a fork-hoist licence
  - certified welders

## Industrial Bins

| RXP Code | Description |
|---|---|
| | Ribbed Hide Bin |
| IRHB.1250LN | 1250 Litre Ribbed Hide Bin only - Natural |



890mm (h) x 1400mm (w) x 1135mm (l)
Comes with 3 x 50mm buttress thread bungs. Bins are nestable and can be forklifted.

| | |
|---|---|
| IRHB.LIDN | Ribbed Hide Bin Lid only - Natural |

| | |
|---|---|
| | Offal Bin |
| IOB.1340LB | 1340 Litre Offal Bin - Black |



1185mm (h) x 1150mm (w) x 1150mm (l)
Bins have no bungs. Bins are nestable and can be forklifted.

# INDUSTRIAL

## Fishing / Pumping

| RXP Code | Description |
|---|---|
| | Mussel Buoys |
| IMBF.B | Mussel Buoy Float - Black |
| IMBF.BLUE | Mussel Buoy Float - Blue |



1400mm (l) x 690mm (d)
Pressurised before dispatched from factory.
Uses - fishing industry, dairying, irrigation, pontoons. 300kg of floatation.

## Safety

| | Safe T Step |
|---|---|
| ISS.YELLOW | Safe T Step - Yellow |



360mm (h) X 475mm (w) x 475mm (l)
Available in Yellow. Loaded rated to 120kgs (certificate 5104091602).
Features non slip strip on the top and rubber buffers on the base.
Uses - Supermarkets, schools, libraries, factories, offices, warehouses and stores and Safety Equipment resellers.

| | |
|---|---|
| ISS.FEET SCREWS | Safe T Step Feet and Screw |

## Barrels and Casks

| | Casing Cask Barrel |
|---|---|
| ICCB.150LB | 150 Litre Casing Cask Barrel - Black |

740mm (h) x 530mm (d)



| | |
|---|---|
| ICCB.200LB | 200 Litre Casing Cask Barrel - Black |

875mm (h) x 645mm (d)

Barrels supplied with screw in lid.
Used in freezing works for casing, or for stockfeed.

| | Bulkie Barrel |
|---|---|
| IBKB.200LB | 200 Litre Bulkie Barrel with Screw in Lid - Black |
| IBKB.200LN | 200 Litre Bulkie Barrel with Screw in Lid- Natural |

875mm (h) x 615mm (d)



| | |
|---|---|
| IBKB.220LB | 220 Litre Bulkie Barrel with Screw in Lid - Black |
| IBKB.220LN | 220 Litre Bulkie Barrel with Screw in Lid - Natural |

970mm (h) x 615mm (d)

Barrels supplied with screw in lid.
Used in freezing works for casing, or for stockfeed.

# INDUSTRIAL

## Tanks and Bins

| RXP Code | Description |
|---|---|
| | Open Top Tank |
| RX422LB | 422 Litre Open Top Tank - Black |
| RX422LN | 422 Litre Open Top Tank - Natural |
| 980mm (h) x 825mm (d) | |



| | |
|---|---|
| RX1818LB | 1818 Litre Open Top Tank - Black |
| 1240mm (h) x 1500mm (d) | |

Supplied with a slip on lid. Replacement lids are not available.



| | |
|---|---|
| | 150 Litre Bin with Castors |
| IBIN.150LN | 150 Litre Bin With Castors - Nat (Sims) |

600mm (h) x 550mm (w) x 810mm (l)
Features four castors for easy movement. Suitable for laundry and hospital industry.



## Segregation Bins

| | |
|---|---|
| | Segregation Bin |
| ISB.450LG | 450L Segregation Bin - Green For Foods |

815mm (h) x 970mm (w) x 970mm (l)
Fully sealed lockable lid.



# INDUSTRIAL

## Tubs

| RXP Code | Description |
|---|---|
| | 90 Litre Tub |
| ITUB.90LB | 90 Litre Tub - Black |
| 415mm (h) x 345mm (w) x 645mm (l) | |



| | Tub With Lid |
|---|---|
| ITUB.160LN | 160 Litre Tub With Lid - Natural |
| 310mm (h) x 530mm (w) x 980mm (l) This product is nestable for freighting. | |



| | |
|---|---|
| ITUB.189LB | 189 Litre Tub With Lid - Black |
| ITUB.189LN | 189 Litre Tub With Lid - Natural |
| 450mm (h) x 580mm (w) x 900mm (l) | |



| | |
|---|---|
| ITUB.238LB | 238 Litre Tub With Lid - Black |
| ITUB.238LN | 238 Litre Tub With Lid - Natural |
| 500mm (h) x 590mm (w) x 940mm (l) | |



These products are nestable for freighting. Replacement lids are not available.

| | |
|---|---|
| ITUB.432LB | 432 Litre Tub With Lid - Black |
| ITUB.432LN | 432 Litre Tub With Lid - Natural |
| 600mm (h) x 600mm (w) x 1200mm (l) Replacement lids are not available for the above Tubs. | |



| | Jetter Tub |
|---|---|
| ITUB.250LN | 250 Litre Jetter Tub - Natural |
| 660mm (h) x 675mm (w) x 1030mm (l) | |



| | |
|---|---|
| ITUB.360LN | 360 Litre Tub Jetter - Natural |
| 660mm (h) x 675mm (w) x 1350mm (l) | |



| | |
|---|---|
| ITUB.500LN | 500 Litre Tub Jetter - Natural |
| 660mm (h) x 675mm (w) x 1820mm (l) Replacement lids for Jetter Tubs are not available. | |



## Chamber Pits

| | Access Chamber Pit |
|---|---|
| CBA600 | Class B Chamber Pit - 600mm |
| Height 610mm. Suits 600mm excavation depth. 10mm wall thickness | |



| | |
|---|---|
| CBA900 | Class B Chamber Pit - 900mm |
| Height 910mm. Suits 900mm excavation depth. 10mm wall thickness | |



# INDUSTRIAL



## Chemical Tanks

Please enquire customerservice@rxplastics.co.nz

## Wine Tanks

A cost effective storage option for a bulk beverage storage.
Please enquire: customerservice@rxplastics.co.nz

## Premium Wine Tank



- Food grade polyethylene tank (FDA approved).
- UV stabilised.
- Easy to clean.
- Stainless steel top entry manway complete with pressure/vacuum relief valve.
  - 450mm ID - 500 to 15,400 litre
  - 500mm ID - 25,700 to 31,500 litre
- Stainless steel side entry manway 500mm ID (not available on 500 and 1,100 litre tanks).
- 25mm short handled ball valve on top of the dome (not available on 500 and 1,100 litre tanks).
- Stainless steel 50mm BSP to RJT butterfly valve.
- 10 year warranty or 5 year warranty, when side entry manway installed.
- Minimum turnaround - 2 weeks from placement of order.

Colours available

Beige | Light Grey | Mist Green

Sizes available

| | |
|---|---|
| Extra small: | 500 litres and 1,100 litres |
| Small: | 5,800 litres and 8,000 litres |
| Medium: | 15,400 litres |
| Large: | 25,700 litres and 31,500 litres |

## Standard Wine Tank



- Food grade polyethylene tank (FDA approved).
- UV stabilised.
- Easy to clean.
- Plastic food grade screw in lid (vented).
  - 450mm - 500 to 15,400 litre
  - 620mm - 25,700 to 31,500 litre
- Food grade 50mm tank fitting.
- 50mm ball valve.
- 25mm short handle ball valve on top of the dome (not available on 500 and 1,100 litre tanks).
- 10 year warranty or 5 year warranty, when side entry manway installed.

RX PLASTICS LTD
19 MARONAN ROAD, TINWALD
PO BOX 360, ASHBURTON, NEW ZEALAND
0800 288 558
customerservice@rxplastics.co.nz
www.rxplastics.co.nz

# TERMS AND CONDITIONS OF SUPPLY

RX Plastics Ltd ("the company") products and services ("goods") are supplied subject to the following Terms and Conditions of sale which shall prevail despite any indication to the contrary given by any person acting or purporting to act on this company's behalf. Any variations to the conditions set out below require our written confirmation (including all representations or understandings which may conflict with any of them).

**1. Purpose:**

1.1 All goods are supplied to Buyers for business purposes and accordingly the Consumer Guarantees Act 1993 does not apply to these conditions of sale.

**2. Acceptance:**

2.1 Receipt of an order will be deemed acceptance by the Buyer of these terms, notwithstanding anything stated to the contrary in the Buyer's enquiries on the Buyer's order.

**3. Delivery:**

3.1 Goods are offered subject to availability and are sold on the basis that the place of delivery is the Buyers premises. Delivery to the Buyer's nominated carrier or to a carrier appointed by the Company shall be deemed delivery to the Buyer. Where the Buyer requires delivery other than their own premises (store), the Buyer accepts all liability for loss or damage and subsequent payment/s.

**4. Freight and Insurance:**

4.1 Freight and transit insurances are to the Buyer's account unless specified to the contrary.

**5. Assignment:**

5.1 The Customer may not assign all or any of its rights or obligations under this contract without the prior written consent of the Company.

**6. Waiver:**

6.1 The failure of the Company at any time to enforce any provision of this agreement shall not be construed as a waiver of any such provision or shall not in any way affect the validity of this contract or any part thereof. All waivers shall be effective only in writing by the Company.

**7. Tolerances:**

7.1 Unless otherwise agreed in writing or specifically prescribed by an applicable specification or standard, all goods are sold subject to:

(a) manufacturer's normal tolerances, variations and limitations in respect of dimension, mass, straightness, composition, mechanical properties, surface and internal conditions chemical composition and quality; and
(b) diversions from such tolerances, variations and limitations consistent with practical testing and inspection methods; and
(c) any discrepancy in quantity not exceeding 10% from that ordered; and
(d) the Company's normal packaging practice.

**8. Payment:**

8.1 All prices are net on delivery of the goods to the custody of the first Carrier.

8.2 Payment is due on the 20th on the month following date of delivery to the custody of the first carrier, except that for goods supplied direct from overseas on indent or specific order for the customer payment is due on receipt of the Company's invoice, or bill of lading, or other negotiable instrument, whichever is presented first. The Company reserves the right to treat each separate delivery as a separate contract for the purposes of payment.

**9. Default of Payment:**

9.1 It is acknowledged that the relationship between the Company until the Buyer is that of vendor and purchaser for cash, and that this clause has effect only when the buyer defaults on the obligation to pay for the goods.

9.2 The Buyer agrees to pay interest on all sums outstanding at 2.5% per month from the date of default (i.e. when payment becomes due and is not made) until payment is made.

9.3 If a solicitor or debt collector is instructed by the Company the Buyer agrees to pay the solicitor or debt collector's reasonable fees and disbursements as charged to the Company in full.

9.4 All payments by the Buyer shall be applied first in the reduction of interest and costs due pursuant to 9.2 and 9.3 and the balance shall then be applied in reduction of amounts due under 8.2.

9.5 The Company shall be entitled at any time to assign to any other person (being a related company of RX Plastics Ltd within the meaning ascribed to that term by section 2 (3) of the Companies Act 1993) all or any part of the debt owing to the Company and notwithstanding any rule of common law or equity to the contrary or the appointment of a liquidator receiver and/or manager over the Buyer or the assets thereof, the assignee shall be entitled to claim full rights of set-off or counterclaim against the Buyer, its charge holders or successors, in respect of the debt or part thereof so assigned.

9.6 Without prejudice to such other rights as the Company may have the Buyer agrees to grant to the Company such further security as the Company may from time to time request so as to secure to the Company all sums due to it. Such security may be by way of a mortgage of land or directors personal guarantees or a debenture charge over the assets of the Buyer and shall be prepared at the Buyer's expense by the Company's solicitors and shall contain all usual provisions. Should the Buyer default granting of any such security in registrable form then the Company is hereby irrevocably appointed the Buyer's attorney in the Buyer's name and on its behalf to enter into, execute and sign all deeds, instruments, acts and things whatsoever which may be necessary to complete such further security.

**10. Ownership and Risk:**

10.1 Ownership in the goods shall remain vested in the Company until the Buyer has made payment in full for all goods supplied by the Company to the Buyer, together with all interest and monies due.

10.2 Until payment in full in terms of Clause 10.1:

(a) all goods supplied shall remain the sole and absolute property of the Company;
(b) the Buyer will hold the goods in trust for the Company as bailee of the Company;
(c) the Buyer shall store the goods on the Buyer's premises in such a manner as to make them readily identifiable as belonging to the Company and shall display such identification as may from time to time be requested by the Company:
(d) if the goods are sold by the Buyer then all proceeds of sale shall be the property of the Company and shall be retained in a separate account by the Buyer in trust for the Company and shall not be intermingled with any other monies or paid into any overdrawn bank account and shall at all times be kept identifiable as monies held in trust for the Company;
(e) if before it becomes the owner of the goods the Buyer makes new objects from the goods or incorporates them into or with other goods those other or new goods shall be held on trust for the Company;
(f) the Buyer will "on demand' (as those words are defined in the Fifth Schedule in the Chattels Transfer Act 1924 now repealed) assign to the Company all proceeds of sale of the goods by the Buyer and will upon request disclose to the Company full details of the sale and the proceeds;
(g) where the Company has reasonable cause to believe the Buyer has not strictly complied with these Terms and Conditions or that the Buyer has or will commit an act of bankruptcy or (being a company) has had a receiver appointed or about to be appointed the Company may repossess any or all of the goods supplied and for such purpose may at any time day or night enter by force if necessary upon any premises where such goods are reasonably thought to be stored.

10.3 Notwithstanding anything else herein contained, the risk in any and all goods supplied shall pass to the Buyer on dispatch of the goods from the Company's premises and in particular, the Buyer shall be responsible for all goods in transit and shall fully insure them.

10.4 The Buyer shall reimburse the Company for all liabilities and expenses (including legal expenses) incurred by it in enforcing or attempting to enforce any rights it has under this Clause 10.

**11. Cancellation:**

11.1 Notwithstanding any other agreement as to the terms of payment, the total purchase price shall immediately become due and payable and the company shall have the right to forthwith cancel this contract (without prejudice to any other of its rights) upon the occurrence of any of the following events:

(a) The Buyer ceases, or threatens to, carry on the business;
(b) The Buyer enters into any negotiations for any arrangement or composition with its creditors;
(c) The Buyer is unable to pay its debts (including contingent liabilities) as they fall due;
(d) The Buyer becomes bankrupt or commits an available act of bankruptcy or proceedings are taken for liquidation of the Buyer's affairs,
(e) The Buyer, being a company, goes into liquidation whether voluntary or compulsory or does anything or fails to do anything which would allow a receiver or manager to be appointed or a receiver or manager to take possession of any of the Buyers assets or which would entitle any person to present an application for winding up or is wound up or dissolved or placed under statutory management or enters into a scheme or arrangement with its creditors or any class thereof:
(f) Any distress or execution is levied on the Buyer;
(g) Breach by the Buyer of any other terms contained in this agreement.

11.2 Upon the happening of any or more than one of the above events the Company will be entitled to repossess and resell goods which remain the property of the Company within the terms of Clause 8.

**12. Prices:**

12.1 Prices quoted are GST exclusive and are based on rates and charges in effect at the date of the sales contract or as listed in the Company's price book.
12.2 Any difference between these rates and charges and those actually ruling at the time of delivery or incurred by the Company will be to the Buyer's account.
12.3 The rates and charges referred to above include, but are not limited to:

(a) the rates of currency exchange, freight, insurance and customs duty;
(b) the cost of labour, wharfage, clearing, handling and delivery;
(c) the cost of the goods to the Company.

12.4 Where contracts are based on the latest terms of supply available to the Company from a specific supplier the Company reserves the right to pass on to the Buyer any extra costs incurred by the Company as a result of:

(a) Changes in the terms of supply by that supplier; or
(b) The Company accessing an alternative supplier.

12.5 Where the Company issues special quoted prices on the Company's standard quote form, the conditions of the quotation document shall apply, notwithstanding other related standard terms and conditions of sale as contained herein.

**13. Tax:**

13.1 Any tax is additional to the Company's quoted prices and shall be the Buyer's responsibility.

**14. Limitation of Liability:**

14. The following provisions shall not apply to any supply of goods made to a Buyer for personal, domestic or household use but only to supplies made for business purposes
14.2 The Company's liability in any event (whether under these Terms and Conditions or otherwise howsoever) is limited to:

(a) the replacement of any goods supplied free of charge on the same basis as originally agreed or as set out in Clause 3 hereof; or
(b) at the option of the Company a refund of the sale price; and
(c) in respect of defective goods not manufactured by it, the Company shall in no event be liable to pay to the Buyer any amount in excess of such amount (if any) as it shall have received from its supplier in respect of the defect; and
(d) if the contract is frustrated, and/or the goods cannot be delivered for any cause whatsoever, then it is expressly agreed that all expenses incurred by the Company in connection with the contract are to be set off against any sum payable by the Company to the Buyer; and the balance, if any, of the Company's expenses in connection with the contract over the amount of the set-off, is to be paid to the Company by the Buyer.

14.3 The Company accepts no responsibility for labour, material and other costs incurred in removing defective goods and refitting its replacement or for any loss or damage howsoever arising from and whether directly or indirectly attributable to, any defect in any goods supplied.
14.4 Without limiting anything elsewhere contained in these Terms and Conditions, the Company will not be liable for labour, material and other costs or any consequential losses incurred in respect of the Company's failure to supply the goods, or to supply them by any particular time or at any particular place.
14.5 'Downgrade' material is sold without warranty as to product quality fitness for purpose or compliance with specification.
14.6 Except as expressly provided in these Conditions all express or implied conditions, statements or warranties, whether statutory or otherwise, are expressly excluded.
14.7 The Buyer shall indemnify the Company against any and all liability the Company may incur as a result of supplying or agreeing to supply goods to the Buyer other than any liability arising under Clause 14. 2 or any liability to a consumer arising under the Consumer Guarantees Act 1993. This indemnity shall extend to any liability of the Company to any third party who has acquired the goods from the Buyer for business purposes and the Buyer has failed to contract out of the provisions of the Consumers Guarantees Act 1993.
14.8 No clause herein shall be construed as limiting any other clause, but shall be construed as extending the widest limitation of liability in favour of the Company (which term shall for the purposes of this clause be deemed to include officers, employees and agents),

**15. Law Applicable:**

15.1 This contract shall be construed and governed by the laws of New Zealand.

**16. The Privacy Act 1993**

16.1 The Buyer acknowledges that:

(a) Personal information collected or held by the Company (whether contained in this document or otherwise obtained) is provided and may be held, used and disclosed for the
following purposes:
(b) Administering, whether directly or indirectly, the Company's contracts and enforcing the Company's rights thereunder;
(c) Marketing goods and services provided by the Company;
(d) Ascertaining at any time the Buyer's creditworthiness and obtaining at any time credit reports, character references or credit statements:
(e) Enabling the Company to notify any credit agency of any application for credit or default on any obligation of the Buyer to the Company enabling the Company to provide such personal information to any credit agency so such credit agency can maintain effective accounting records;
(f) Enabling the Buyer to communicate with the Company for any purpose;
(g) Such personal information is collected by and will be held by the Company whose address is Maronan Rd, PO Box 360, Ashburton, New Zealand.

16.2 The Buyer has the right under the Privacy Act 1993 to obtain access to and to request correction of any personal information concerning it held by the Company.
16.3 The Buyer authorises the Company to obtain at any time from any person or entity, any information the Company may require to process and/or accept any application for credit the Buyer may make to the Company or to perform or complete any of the other purposes for which the Buyer has provided personal information to the Company. The Buyer authorises any such person to release to the Company any personal information that person holds concerning the Buyer.
16.4 For the purposes of the preceding clauses the term "the Company" includes any financier or discounter of the Company's contract or any related company of the Company. The term 'related company" has the meaning given it by the Companies Act 1993 or replacement legislation.

**17. Force Majeure:**

17.1 The Company is not liable for failure or delay in supply or delivery occasioned by strike, industrial dispute, natural disaster, shortage or unavailability of stocks of products or raw materials, shortage of labour, lack of skilled labour, failure of the Customer's suppliers delay in transit, import restriction, legislative governmental or other prohibition or restriction, fire, flood, hostilities, commotions or other causes whatsoever beyond the Company's reasonable control including power outage or telecommunication disruption or act of war or terrorist attack.

**18. Local Laws:**

18.1 It shall be entirely the responsibility of the buyer to ensure that the goods and the use thereof comply with the laws, regulations and codes of a particular country or local authority and with the requirements of the Buyer.

**19. Acceptance of Quotation:**

19.1 The Company's quotation shall be deemed to be withdrawn unless accepted by the buyer within a period of 30 days from the date of issue, unless otherwise agreed.

**20. GST**

20.1 Prices will be quoted inclusive or exclusive of GST and such option shall be specified in writing on the quotation.

**21. Allocation of Payments Received:**

21.1 Where, at any time, there is an amount owing by the buyer under any two or more contracts, the Company may apply a payment made by the buyer in such manner (including in such order and to any amounts owing to the Company, including under another contract) as the Company thinks fit and in the Company's sole discretion (despite any direction to the contrary and whether before or after any default by the buyer). The security interest provided for by these Terms and created by this Agreement also secures the amount owing under each contract and this Agreement shall be construed accordingly.

**22. Payment by other than Cash:**

22.1 Receipt by the Company of any form of payment other than cash shall not be deemed to be payment until that form of payment has been honoured.

**23. Inspection and Returns:**

23.1 The buyer agrees to inspect the goods and verify delivery within 7 days of receipt. If no notice to the contrary has, within 7 days of delivery, been communicated to the company, the buyer is deemed to have accepted the goods or services as received. The Company will, at the company's option issue a credit note for the goods or will repair or replace the goods where disclosed as faulty on such inspection following delivery and when the goods are authorised by the Company to be returned to the company as faulty.

**24. Queries/Disputes:**

24.1 The Company will not consider any job or account queries which are not raised within 1 month from the date of invoice.

**25. Security Interest:**

25.1 Each contract for the supply of goods entered into between the buyer and the Company creates, in favour of the Company, a security interest in the goods which are the subject of the contract and such security interest secures the payment by the buyer lo the Company of all amounts the buyer may owe the Company from time to time and at any time, including future advances.

25.2 The buyer authorises the Company to take possession of the collateral if the Company from time to time deems it necessary to do so to perfect or re perfect the Company's security interest in the collateral. For the purposes of this clause, possession includes but is not limited to the meaning ascribed to it in section 18 of the PPSA.

25.3 The buyer agrees that it will not do any thing or allow any act to be done which would have the effect of allowing the creation of a lien over any or all of the collateral that is the subject of the Company's security interest.

25.4 The buyer agrees to indemnify the Company, upon demand from the Company, for all costs and expenses (including legal fees) incurred to the Company as a result of the buyer defaulting under this Agreement and in complying with any demand made under section 162 of the PPSA.

25.5 On the request of the Company, the buyer shall promptly do all things necessary and provide all information required by the Company to enable the Company to perfect and maintain the perfection of any security interest granted to the Company by the buyer (including registration of a financing statement over the goods or the proceeds thereof).

25.6 The buyer shall promptly notify the Company of any changes to its personal details as supplied on the credit application form. Where the buyer proposes to change its name, it shall notify the Company accordingly within 5 days of the change taking effect.

25.7 The buyer shall, within five working days of receiving a written request from the Company, supply the Company with copies of all security interests registered over the buyer's personal property and the Customer hereby authorises the Company, as its duly appointed agent, to request information from any secured party relating to any security interest to which the buyer is a debtor.

**26. Security Interest where goods become Accessions etc:**

26.1 The Company's interest in the goods continues if the goods are processed included or dealt with in any way causing them to become accessions processed or commingled goods (as defined in the PPSA). The security interest in the original goods will continue in the whole in which they are included and the buyer agrees that it will not grant to any other person a security interest in either the goods or in the whole.

**27. Verification Statement:**

27.1 The Customer waives its right to receive a copy of the Verification Statement in respect of any financing statement relating to the security interest granted to the Company by the Buyer.

**28. Receiver:**

28.1 In addition to any other right, power or remedy of the Company expressed or implied in this agreement, at any time after the Customer has defaulted in its obligations, the Company may appoint in writing any person or persons receiver of all or any of the collateral and the receiver shall have the power set out in the Receiverships Act 1993.

**29. Trustee Liability:**

29.1 Where the Customer is a trust, each trustee of the trust is bound by this Agreement and the trustees' liability shall not be limited to the assets of trust unless the trustee is an independent trustee (being a trustee who has no right to or interest in any of the assets of the trust either directly or indirectly except in the trustee's capacity as trustee of that trust). However, this limitation of liability for independent trustees shall not affect the liability of the independent trustee that personally guarantees the buyer's obligations under this Agreement.

**30. Contracting out of the PPSA:**

30.1 The parties contract out of sections 114(1)(a), 117(1)(c), 133 and 134 of the PPSA.

30.2 The parties contract out of Buyers rights in sections 116, 119, 120(2), 121, 125, 129, 131 and 132 of the PPSA.

**31. Warranty:**

31.1 Subject to the conditions of warranty set out in clause 31.2 the Seller warrants that if any defect in any workmanship of the Seller becomes apparent and is reported to the Seller within twelve (12) months of the date of delivery (time being of the essence) then the Seller will either (at the Seller's sole discretion) replace or remedy the workmanship.

31.2 The conditions applicable to the warranty given by clause 31.1 are:

(a) the warranty shall not cover any defect or damage which may be caused or partly caused by or arise through:
(b) failure on the part of the Buyer to properly maintain any Goods; or
(c) failure on the part of the Buyer to follow any instructions or guidelines provided by the Seller; or
(d) any use of any Goods otherwise than for any application specified on a quote or order form; or
(e) the continued use of any Goods after any defect becomes apparent or would have become apparent to a reasonably prudent operator or user; or
(f) fair wear and tear, any accident or act of God.

31.3 The warranty shall cease and the Seller shall thereafter in no circumstances be liable under the terms of the warranty if the workmanship is repaired, altered or overhauled without the Seller's consent.

31.4 In respect of all claims the Seller shall not be liable to compensate the Buyer for any delay in either replacing or remedying the workmanship or in properly assessing the Buyer's claim.

31.5 For Goods not manufactured by the Seller, the warranty shall be the current warranty provided by the manufacturer of the Goods. The Seller shall not be bound by nor be responsible for any term, condition, representation or warranty other than that which is given by the manufacturer of the Goods.

31.6 To the extent permitted by statute, no warranty is given by the Seller as to the quality or suitability of the Goods for any purpose and any implied warranty, is expressly excluded. The Seller shall not be responsible for any loss or damage to the Goods, or caused by the Goods, or any part thereof however arising.

31.7 The conditions applicable to the warranty given on Goods supplied by the Seller are contained on the 'Warranty Card' that will be supplied with the Goods.

31.8 In the case of second hand Goods, the Buyer acknowledges that he has had full opportunity to inspect the same and that he accepts the same with all faults and that no warranty is given by the Seller as to the quality or suitability for any purpose and any implied warranty, statutory or otherwise, is expressly excluded. The Seller shall not be responsible for any loss or damage to the Goods, or caused by the Goods, or any part thereof however arising.

**32. Intellectual Property:**

32.1 Where the Seller has designed, drawn or developed Goods for the Buyer, then the copyright in any designs and drawings and documents shall remain the property of the Seller.

32.2 The Buyer warrants that all designs, specifications or instructions given to the Seller will not cause the Seller to infringe any patent, registered design or trademark in the execution of the Buyer's order and the Buyer agrees to indemnify the Seller against any action taken by a third party against the Seller in respect of any such infringement.

32.3 The Buyer agrees that the Seller may (at no cost) use for the purposes of marketing or entry into any competition, any documents, designs, drawings or Goods which the Seller has created for the Buyer.

**33. Unpaid Seller's Rights:**

33.1 Where the Buyer has left any item with the Seller for repair, modification, exchange or for the Seller to perform any other service in relation to the item and the Seller has not received or been tendered the whole of any moneys owing to it by the Buyer, the Seller shall have, until all moneys owing to the Seller are paid:

(a) a lien on the item; and
(b) the right to retain or sell the item, such sale to be undertaken in accordance with any legislation applicable lo the sale or disposal of uncollected goods.

33.2 The lien of the Seller shall continue despite the commencement of proceedings, or judgment for any moneys owing to the Seller having been obtained against the Buyer.

**34. General:**

34.1 These terms and conditions and any contract to which they apply shall be governed by the laws of New Zealand and are subject to the jurisdiction of the courts of New Zealand.

34.2 The Seller shall be under no liability whatsoever to the Buyer for any indirect and/or consequential loss and/or expense (including loss of profit) suffered by the Buyer arising out of a breach by the Seller of these terms and conditions (alternatively the Seller's liability shall be limited to damages which under no circumstances shall exceed the Price of the Goods).

34.3 The Buyer shall not be entitled to set off against, or deduct from the Price, any sums owed or claimed to be owed to the Buyer by the Seller nor to withhold payment of any invoice because part of that invoice is in dispute.

34.4 The Seller may license or sub-contract all or any part of its rights and obligations without the Buyer's consent.

34.5 The Buyer agrees that the Seller may amend these terms and conditions at any time. If the Seller makes a change to these terms and conditions, then that change will take effect from the date on which the Seller notifies the Buyer of such change. The Buyer will be taken to have accepted such changes if the Buyer makes a further request for the Seller to provide Goods to the Buyer.

©Copyright-EC Credit Control 1999 • 2013



by aliaxis

PO Box 360, Ashburton 7740
P: 0800 288 558
E: customerservice@rxplastics.co.nz
rxp.co.nz

RXP0304 May 2026