

RXP WATER STORAGE

PROVEN QUALITY AND PERFORMANCE

by aliaxis

BENEFITS OF RXP WATER TANKS

RXP are a leading specialist in the manufacture of customised tanks as well as high quality standard tanks designed for a range of purposes.

Durable

Proudly designed and made in New Zealand from UV stabilised, food grade polyethylene compliant to the highest standard AS/NZS4766 with a 20-year warranty.

Engineered

Engineered tapered wall design, meaning strength where it is needed. Fittings up to 100mm can be directly installed to the wall, including compliant firefighting kits. Sand blasted non reflective finish in a range of six colours that blend in with the surrounding environment.

Proven

Rural specialists know what good looks like. This is why they specify RXP – the tank they can rely on. Six lifting or tie down lugs make moving and securing simple and four flat panels makes fitting accessories and the installation of tank simple and easy.



OUR SOLUTIONS

Consider your water storage sorted with RXP's tanks. Suitable for various agricultural, urban and industrial applications.

- Easy to install
- UV stabilised, food grade polyethylene (FDA approved)
- Resistant to algae growth
- Lab tested to ensure all our tanks meets our strict guidelines
- Use of diagnostic tooling during manufacture ensures heating and cooling cycles are optimised
- One piece construction with tapered walls for strong robust tanks
- A wide range of quality accessories including fire fighting kits, made to use with our standard MAX Tanks

Standard Tank Colours

MAX™TANK RANGE 10,000-30 000L



Mist Green | Heritage Green | Beige | Black | Karaka Green | Dark Grey | Light Grey

WATER TANKS 500-7500L



Mist Green | Heritage Green | Beige | Black

Other colours available on request.

MAX TANKS™

10,000 North Island ONLY **| 15,000 | 25,000** North Island ONLY
26,000 South Island ONLY **| 30,000 Litres**

Features:

- 400mm manhole for easy inspection (15,000 litres)
- 600mm manhole for easy inspection (25,000 and 30,000 litres)
- Building permit not required for 30,000 litre tank
- 6 large lugs for lifting, carrying and tying down
- Flat panel for ballcock and accessories, and for ladder stability
- For water use 1SG only (1m^3 =1000kgs water)
- For use of potable water storage between 1 – 23 ˚C
- All tanks are supplied with a vented lid
- 20 year warranty

15,000 | 25,000 | 26,000 | 30,000 litre MAX™ Tanks have one threaded outlet supplied with a 50mm male threaded tank inlet (RXTTI50), a 50mm male/ female 90 degree threaded elbow (RXTMFE50) and a 50mm cap and washer (RXC/W50).

WATER TANKS

500 | 1,100 | 2,000
3,200 | 5,250 | 7,500 Litres

Features:

- 400mm manhole for easy inspection
- 500 – 1,100 litre tanks have centre placement for manhole
- 2,000 – 7,500 litre tanks have outside edge placement for manhole
- Easy to fit outlets and valves
- 4 lugs for lifting, carrying and tying down
- For water use 1SG only (1m^3 =1000kgs water)
- For use of potable water storage between 1 – 23 ˚C
- All tanks are supplied with RXTTI & hex plug
- All tanks are supplied with a vented lid
- 20 year warranty

These tanks can also be foamed (thick foamed centre between a polyethylene outer and inner skin).

- Provides extra strength
- Superior insulation properties
- Logical for temperature controlled environments

WATER TANK RANGE



30,000 Litres

450kg



26,000 Litres

375kg

SOUTH ISLAND ONLY



25,000 Litres

378kg

NORTH ISLAND ONLY



15,000 Litres

275kg

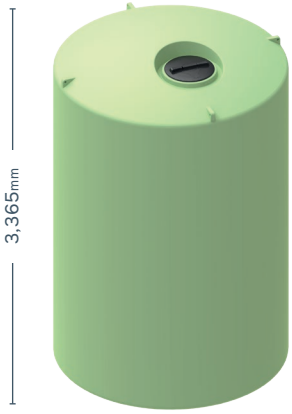

10,000 Litres

250kg

NORTH ISLAND ONLY

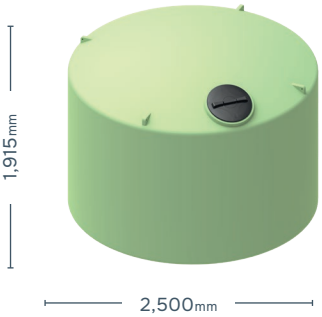

7,500 Litres

152kg

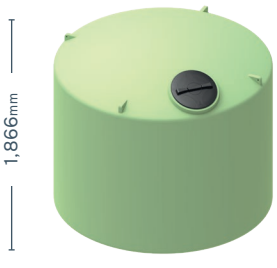

5,250 Litres

117kg

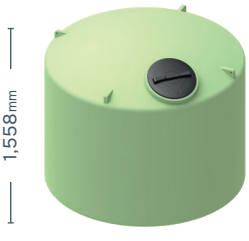

3,200 Litres

75kg



2,000 Litres

50kg



1,100 Litres

35kg



500 Litres

20kg

COLOSTRUM TANKS

500 | 1,100 | 2,000 | 3,200 | 5,250 7,500 | 10,000 Litres North Island ONLY

Colostrum Tanks are made from strong robust translucent plastic.



Features:

- Easy to transport with built-in lifting lugs
- Ease of drilling for wide range of fittings
- 500 – 1,100 litre tanks have centre placement for manhole
- 2,000 – 7,500 litre tanks have outside edge placement for manhole
- Clear stencil markings showing the volume in litres
- Four lugs for lifting, carrying and tying down
- All tanks are supplied with a vented lid
- Colostrum Zinc Coated Manual Stirrer (COLSTIRRER) is also available

MOLASSES TANKS

500 | 1,100 | 2,000 | 3,200 | 5,250 7,500 | 10,000 North Island ONLY **| 15,000 25,000** North Island ONLY **| 26,000** South Island ONLY **| 30,000 Litres**

Molasses Tanks are specially made extra duty tanks for the storage of heavy molasses or similar liquids (1 litre molasses = 1.4kg). Molasses tanks are the same shape as a standard tank but with a thicker wall for holding heavy viscous liquids.

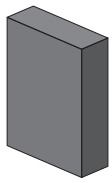

Molasses tank wall

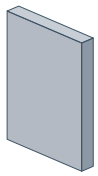

Normal water tank wall



Features:

- 500 – 1,100 litre tanks have centre placement for manhole
- 2,000 – 30,000 litre tanks have outside edge placement for manhole
- Easy to transport with built in lifting lugs
- Thicker walls
- Molasses kits sold separately and fitted to molasses tanks only. Small or large kit options available
- All tanks are supplied with a vented lid

SUSTAINABILITY

In 2023 we recycled over 700,000kgs of plastic.
This equates to an estimated 920T of CO_2-e avoided.

We're working with Waste Management and Unitec ESRC supported by a $12.5m grant from the Ministry for the Environment's Plastics Innovation Fund on a mission to minimise plastic waste, support circular solutions, protect the environment from harm and support the reduction of imported plastics.

In November 2021, RXP joined Meridian Energy's Certified Renewable Energy programme which allows us to purchase renewable energy certificates to verify that the amount of electricity we use from the grid is matched on an annual basis with electricity produced from Meridian's certified hydro stations and wind farms. Committing to this programme enables Aliaxis NZ to report Scope 2 electricity emissions as zero.

PROUD SUPPORTERS OF CERTIFIED RENEWABLE ELECTRICITY GENERATION

Certified Renewable Electricity

100% Renewable Sources
wind, water and sun

aliaxis

We are part of the Aliaxis group - a global company focused on bringing energy efficient and sustainable initiatives.



FIREFIGHTING PACKAGE



Everything you need to meet the Fire Emergency New Zealand fire regulations on farm and rural subdivisions.

To order freephone 0800 288 558 or visit www.rxp.co.nz

FIREFIGHTING PACKAGE

FENZ recommend a minimum of 45,000L of water is made available at a flow rate of 12.5L per second. Our package meets this requirement with our standard MAX tank.

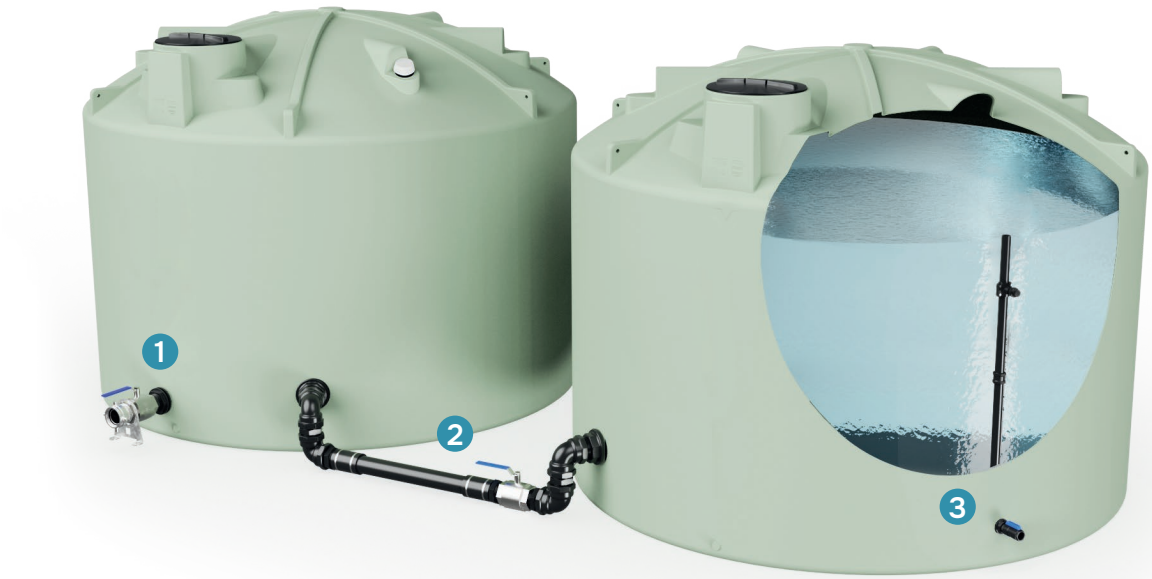

1 Firefighting Kit 100mm

(RXTKFFK100)

Firefighting connection to meet FENZ requirements for rural properties. Comes with a 100mm tank vent.



2 Dual Tank Connection Kit 100mm

(RXTKCK100)

Provides a single source of water with a larger reserve. Meets firefighting standards (SNZ PAS 4509 : 2008)

- Made to meet FENZ regulations
- Easy install at any angle
- Frost protected ball valve

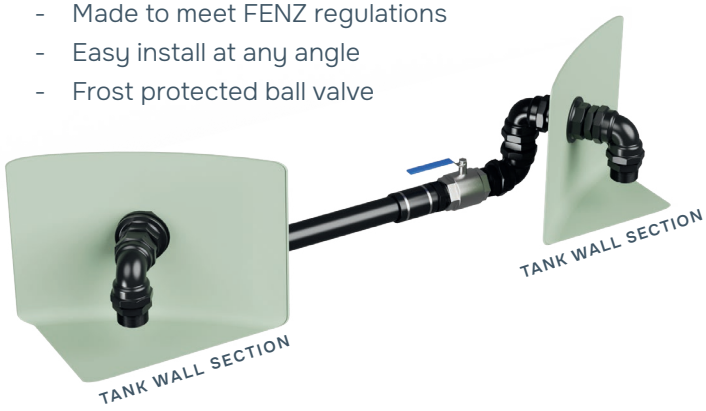

3 45,000L Water Reserve

(RXTKWRK45000L.25)

To ensure enough reserve is maintained at all times while using 2 x 30,000L tanks.



TANK ACCESSORIES

Reserve Dual Outlet Kit 25mm & 50mm
(RXTKRDOK)

To maintain an emergency reserve for when leaks or unforeseen outages occur.



Tank Overflow Kit 50mm & 100mm
(RXTKOVK)

To protect tank from pressuring and/or over filling beyond designed capacity.



Floating Outlet Kit
(RXTKFOK32)

To ensure you get the best water quality at all times.



Water Tank Level Indicator
(RXTKWLI)

For visual indication of tank water level.



Protected Inlet Kit
(RXTKPIK)

To protect inlet from frost, stock and sunlight.



Rising Falling Main
(RXTKRFMK)

To manage tank fill when using single line to both fill tank and deliver reserve supply to troughs.



Tank Outlet Kit 75mm
(RXTKOK75)

Camlock supplied for quick connection.

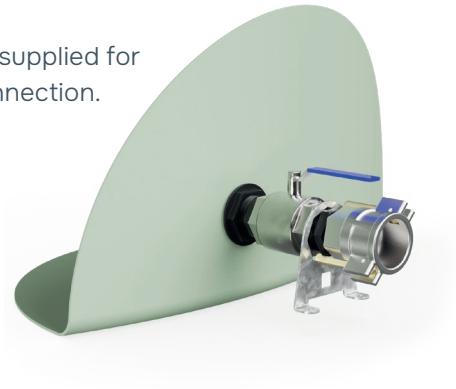

Dual Tank Connection Kit 50mm
(RXTKCK50)

For balancing multiple tanks that don't require a high flow rate.

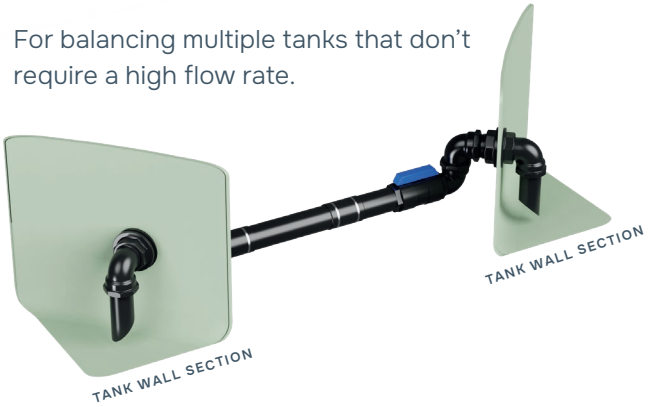

Tank Outlet Kit 50mm
(RXTKOK50)

Valve supplied for easy connection. Can be used for stockwater/ domestic use.



Tank Vent 100mm
(RXTKVENT100)



Tank Outlet Kit 25mm
(RXTKOK25)

Valve supplied for easy connection. Can be used for stockwater/ domestic use.



Tank Vent 50mm
(RXTKVENT50)



ABOUT RXP

RXP are manufacturers of smart rural water management solutions. With over 50 years of knowledge and innovation in the water category we are the experts. We are the only company in New Zealand providing products for the storage, transportation, and application of water. Our technical team develop practical solutions based on our working knowledge of how each part works together and what our customers' needs are.

We are focused on improvements and incorporate new methods of operations to ensure high quality standards are maintained and delivery is on time. Our sales and customer service team are focused on ensuring our customers have all the information they need when they need it. Our sustainability initiatives are significant and growing constantly.

Winners of the Mid Canterbury ANZ Business of the Year Awards 2024 in three categories:

- Excellence in Workplace Wellbeing – Large Business
- Excellence in Export – Large Business
- Excellence in Manufacturing



RXP

PO Box 360, Ashburton

P: 0800 288 558
E: customerservice@rxplastics.co.nz

RXP0321 August 2026